For Serial Nos. 160,000 thru 259,999 and 260,000 & Higher

For Serial Nos. 159,999 & Lower Reference Part number 850417

OPERATOR'S MANUAL

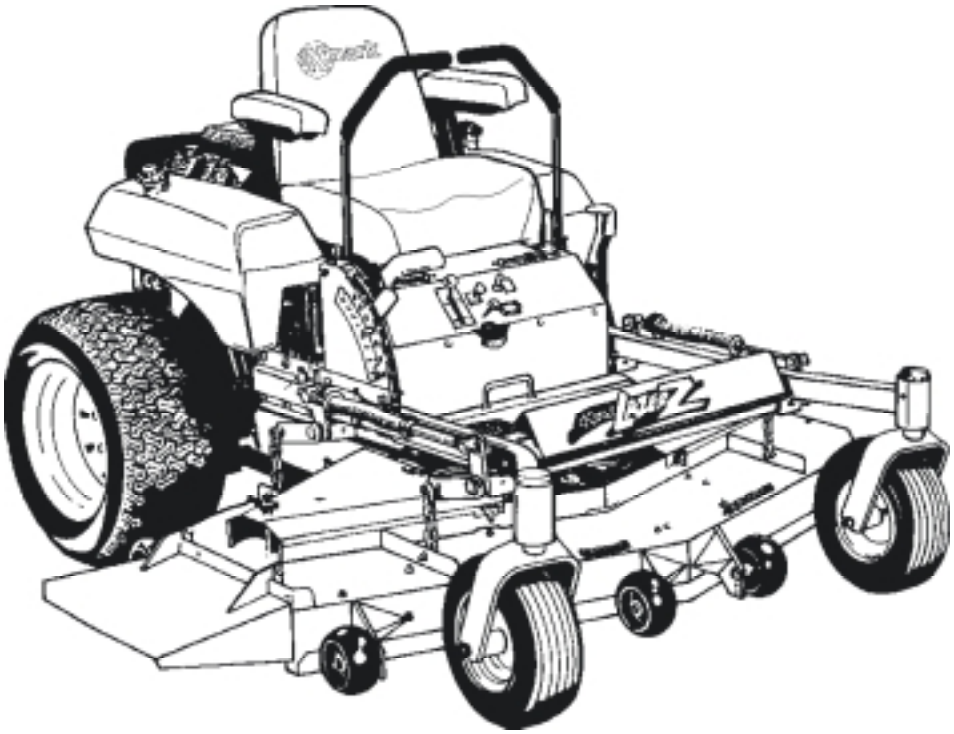

LAZER Z®

CONGRATULATIONS on the purchase of your new Exmark mower. This product has been carefully designed and manufactured to give you a maximum amount of dependability and years of trouble-free operation.

If additional information is needed, or should you require trained mechanic service, contact your authorized Exmark equipment dealer or distributor.

If you need to order replacement parts from your dealer, always give the model number and serial number of your mower as well as the part number, description and quantity of the part needed.

The Serial No. plate is located on the right side of the console.

For ease of ordering and reference, we suggest that you record the information requested in the following identification table.

Model No. _____

Serial No. _____

Engine Model No. _____

Engine Serial No. _____

Date Purchased _____

Paste Label From Literature Packet Here

⚠ WARNING

POTENTIAL HAZARD

- This product is a piece of power equipment.

WHAT CAN HAPPEN

- Failure to follow safe operating practices can result in serious operator injury or even death.

HOW TO AVOID THE HAZARD

- Keep all shields, guards and safety devices (especially the grass discharge system) in place and in proper working condition.
- Stop engine and remove spark plug wire(s) or remove key and wait for all moving parts to stop before adjusting, servicing, or performing maintenance.
- If mower deck becomes clogged, stop engine and remove spark plug wire(s) or remove key and wait for all moving parts to stop before cleaning blockage.
- Keep hands, feet and clothing away from power driven parts.
- Keep off mower unless seat platform is provided.
- Keep others off mower.

⚠ WARNING

POTENTIAL HAZARD

- Gasoline is harmful or fatal if swallowed. Long-term exposure to vapors has caused cancer in laboratory animals.

WHAT CAN HAPPEN

- Failure to use caution may cause serious injury or illness.

HOW TO AVOID THE HAZARD

- Avoid prolonged breathing of vapors.
- Keep face away from nozzle and gas tank/container opening.
- Keep away from eyes and skin.
- Never siphon by mouth.

IMPORTANT

When the mower is used or operated on any California forest, brush or grass covered land, a working spark arrester must be attached to the muffler. If not, the operator is violating state law, Section 442 Public Resource Code. To acquire a spark arrester for your unit, see your Engine Service Dealer.

Exmark reserves the right to make changes or add improvements to its products at any time without incurring any obligation to make such changes to products manufactured previously. Exmark, or its distributors and dealers, accept no responsibility for variations which may be evident in the actual specifications of its products and the statements and descriptions contained in this publication.

EXMARK PARTS PLUS® PROGRAM

EFFECTIVE DATE: September 1, 1995

Program

If your Exmark dealer does not have the Exmark part in stock, Exmark will get the parts to the dealer the next business day or the part will be FREE* Guaranteed!!

How the Program Works

1. If dealer does not have part in stock for a "down" unit at the time of request by customer, the dealer contacts his distributor by 1:00 p.m., local time, and requests Exmark Parts Plus® shipment of six (6) line items or less.

2. Distributor ships part(s) to dealer or customer, as requested by dealer, same day, overnight UPS Distributor bills dealer for part and freight charges where applicable.

3. If distributor does not have the part(s) in stock to satisfy Exmark Parts Plus® order, he contacts Exmark by 3:00 p.m., central time, with an Exmark Parts Plus® order of six (6) line items or less.

4. If order is received by 3:00 p.m. central time, Exmark ships part(s) direct to dealer or customer, as requested by distributor, same day, overnight UPS, Exmark bills the distributor for parts and shipping charges, where applicable.

5. The customer pays for the <u>part</u> and <u>freight</u> if it is shipped under the Exmark Parts Plus® and if it arrives in accordance to the program.

6. Who pays for the <u>part</u> and <u>freight</u> if it fails to arrive overnight in accordance to the program?

   A. Under any circumstance the customer does not pay.

   B. If the part does not arrive overnight due to:

      1. The dealer not submitting the Exmark Parts Plus® order to his Exmark distributor by 1:00 p.m., the dealer pays for the part and freight.

      2. The Distributor being unable to ship the part the same day or not submitting the Exmark Parts Plus® order to Exmark by 3:00 p.m., central time, the Distributor pays for the part and freight.

      3. Exmark being unable to ship the part and the Exmark parts order is received by 3:00 p.m., central time, Exmark pays for the part and freight.

      4. If the part does not arrive overnight due to the shipper (UPS), the shipper pays for the freight and Exmark pays for the part.

<u>The following restrictions apply</u> -- The Exmark Parts Plus® Program is available only through participating Exmark Dealers and applies only to orders submitted on this program Monday through Thursday. Parts Plus service is available only in the 48 contiguous United States. UPS has initiated a Saturday delivery program to many areas of the continental United States and can be requested for an overnight shipment on Friday to be delivered Saturday. The next day air charge, plus the Saturday delivery fee will be the responsibility of the purchaser. Exmark Mfg. will assume no responsibility for Saturday delivery shipments. To qualify, all Exmark Parts Plus® orders must be received by Exmark by 3:00 p.m., central time. Orders must be six (6) line items or less. Exclusions from the Exmark Parts Plus® Program are: Any wholegood or accessory in its entirety, engines and engine replacement parts, 5-speed Peerless transmissions and 5-speed transaxles, hydraulic or hydrostatic wheel motors, cutter decks and engine decks or any item exceeding United Parcel Service size and weight restrictions.

Due to UPS restrictions, aerosol spray paint is considered a hazardous material and cannot be shipped via UPS next day or Second Day Air.

Exmark Manufacturing stocks a limited supply of parts for transaxles, pumps and wheel motors. These parts can be ordered for Next Day Air shipment but will not be guaranteed per the Parts Plus Program.

CONGRATULATIONS on the purchase of your Exmark Mower. This product has been carefully designed and manufactured to give you a maximum amount of dependability and years of trouble-free operation.

OPERATOR'S MANUAL

This manual contains assembly, operating, maintenance, adjustment and safety instructions for your Exmark mower.

BEFORE OPERATING YOUR MOWER,
CAREFULLY READ THIS MANUAL IN ITS ENTIRETY.

By following the operating, maintenance and safety instructions, you will prolong the life of your mower, maintain its maximum efficiency and promote safe operation.

If additional information is needed, or should you require trained mechanic service, contact your authorized Exmark equipment dealer or distributor.

All Exmark equipment dealers and distributors are kept informed of the latest methods of servicing and are equipped to provide prompt and efficient service in the field or at their service stations. They carry ample stock of service parts or can secure them promptly for you from the factory.

All Exmark parts are thoroughly tested and inspected before leaving the factory, however, attention is required on your part if you are to obtain the fullest measure of satisfaction and performance.

TABLE OF CONTENTS

1. SAFETY **PAGE**

1.1 Safety Alert Symbol 1
1.2 Training 1
1.3 Preparation 1-3
1.4 Operation 4-5
1.5 Maintenance & Storage 5-7
1.6 Safety Signs 7-10

2. SPECIFICATIONS

2.1 Model Numbers 11
2.2 Engine 11
2.3 Fuel System 11
2.4 Electrical System 11-12
2.5 Cooling System 12
2.6 Operator Controls 12
2.7 Seat 12-13
2.8 Hydrostatic Ground Drive System 13
2.9 Tires & Wheels 13
2.10 Cutting Deck 13-14
2.11 Dimensions 14-15
2.12 Torque Requirements 15

3. ASSEMBLY INSTRUCTIONS

3.1 Uncrate Mower 15
3.2 Service Battery 15-18
3.3 Install Drive Wheels 18
3.4 Check Tire Pressure 18
3.5 Install Seat Retaining Rod (Standard Seat) or Seat (Suspension Seat) 18
3.6 Install Foot Lift Assist (Kohler 26 HP EFI Only) 19
3.7 Install Canister Air Cleaner (Kohler 26 HP EFI Only) 19
3.8 Install Motion Control Levers 20
3.9 Position Discharge Chute 20
3.10 Service Engine 20
3.11 Service Engine Coolant 20-21
3.12 Service Hydraulic Oil 21

4. OPERATION INSTRUCTIONS

4.1 Controls 21-24
4.2 Pre-Start 24
4.3 Mowing 24-25
4.4 Transporting 25-27

5. MAINTENANCE & ADJUSTMENTS

5.1 Periodic Maintenance 27-41
5.2 Adjustments 41-48

6. WASTE DISPOSAL

6.1 Motor Oil Disposal 48
6.2 Engine Coolant Disposal 48
6.3 Mercury Switch Disposal 49
6.4 Battery Disposal 49-50

7. TROUBLE SHOOTING 50-51
8. ELECTRICAL DIAGRAMS 52-58
9. HYDRAULIC DIAGRAM 59
10. WARRANTY 60-61

1. SAFETY

1.1 SAFETY ALERT SYMBOL

THIS SAFETY ALERT SYMBOL ⚠ IS USED BOTH IN THIS MANUAL AND ON THE MACHINE TO IDENTIFY IMPORTANT SAFETY MESSAGES WHICH MUST BE FOLLOWED TO AVOID ACCIDENTS. THIS ALERT SYMBOL MEANS:

ATTENTION! BECOME ALERT!

YOUR SAFETY IS INVOLVED!

The safety alert symbol appears above information which alerts you of unsafe actions or situations and will be followed by the word **DANGER**, **WARNING**, or **CAUTION.**

When used with the word DANGER: IT DENOTES THAT AN EXTREME HAZARD EXISTS WHICH WOULD RESULT IN HIGH PROBABILITY OF DEATH OR IRREPARABLE INJURY IF PROPER PRECAUTIONS ARE NOT TAKEN.

When used with the word WARNING: IT DENOTES THAT A HAZARD EXISTS WHICH CAN RESULT IN INJURY OR DEATH IF PROPER PRECAUTIONS ARE NOT TAKEN.

When used with the word CAUTION: IT DENOTES A REMINDER OF SAFETY PRACTICES OR DIRECTS ATTENTION TO UNSAFE PRACTICES WHICH COULD RESULT IN PERSONAL INJURY IF PROPER PRECAUTIONS ARE NOT TAKEN.

1.2 TRAINING

1.2.1 Regard the Exmark mower as a piece of power equipment and teach this regard to all who operate this unit.

1.2.2 Read the instructions carefully. Familiarize yourself with the controls and the proper use of the equipment.

1.2.3 Never allow children, teenagers, or people unfamiliar with these instructions to use the mower.

1.2.4 Avoid mowing while people, especially children, or pets, are nearby. Keep in mind that the operator or user is responsible for accidents or hazards occurring to other people or their property.

1.3 PREPARATION

1.3.1 The use of personal protective equipment, such as (but not limited to) protection for the eyes, ears, feet and head is recommended.

⚠ CAUTION
POTENTIAL HAZARD ♦ This machine produces sound levels in excess of 85 dBA at the operator's ear when in operation.
WHAT CAN HAPPEN ♦ Exposure to sound levels of 85 dBA or above for extended periods of time can cause hearing loss.
HOW TO AVOID THE HAZARD ♦ Wear hearing protection when operating this machine.

1.3.2 While mowing, always wear substantial footwear and long trousers. Do not operate equipment when barefoot or when wearing open sandals.

1.3.3 Thoroughly inspect the area where the equipment is to be used and remove all stones, sticks, wires, bones and other foreign objects which may damage the equipment or cause personal injury to the operator or bystanders.

⚠ WARNING

POTENTIAL HAZARD

- Engine exhaust contains carbon monoxide, which is an odorless deadly poison.

WHAT CAN HAPPEN

- Carbon monoxide can kill you and is also known to the State of California to cause birth defects.

HOW TO AVOID THE HAZARD

- Do not run engine indoors or in a small confined area where dangerous carbon monoxide fumes can collect.

⚠ DANGER

POTENTIAL HAZARD

- In certain conditions gasoline is extremely flammable and highly explosive.

WHAT CAN HAPPEN

- A fire or explosion from gasoline can burn you, others, and cause property damage.

HOW TO AVOID THE HAZARD

- *DO NOT* smoke while refueling, and stay away from an open flame or where gasoline fumes may be ignited by spark.
- Refuel only in a well ventilated area, or refuel outdoors.
- Store gasoline in an approved container and keep it out of the reach of children.
- Add fuel before starting the engine. *Never* remove the cap of the fuel tank or add fuel when engine is running or when the engine is hot.
- Never fill the fuel tank so that the gasoline level rises above a level that is 1/2” below the bottom of the filler neck to allow for gasoline expansion and prevent fuel spillage.
- If fuel is spilled, *DO NOT* attempt to start the engine. Move away from the area of the spill and avoid creating any source of ignition until fuel vapors have dissipated.

⚠ DANGER

POTENTIAL HAZARD

- In certain conditions gasoline is extremely flammable and highly explosive.

WHAT CAN HAPPEN

- A static charge can ignite gasoline vapors. A fire or explosion from gasoline can burn you, others, and cause property damage.

HOW TO AVOID THE HAZARD

- Purchase and store gasoline only in an approved container.
- Always place gasoline containers on the ground away from your vehicle before filling.
- Do not fill gasoline containers inside a vehicle or on a truck or trailer bed because interior carpets or plastic truck bed liners may insulate the container and slow the loss of any static charge.
- When practical, remove gas-powered equipment from the truck or trailer and refuel the equipment with its wheels on the ground.
- If this is not possible, then refuel such equipment on a truck or trailer from a portable container, rather than from a gasoline dispenser nozzle.
- If a gasoline dispenser nozzle must be used, keep the nozzle in contact with the rim of the fuel tank or container opening at all times until fueling is complete.

⚠ WARNING

POTENTIAL HAZARD

- Gasoline vapor can collect inside enclosed trailers and may be ignited by electrical sparks or hot engine/exhaust components.

WHAT CAN HAPPEN

- Explosion and fire may occur, resulting in property damage, personal injury and/or death.

HOW TO AVOID THE HAZARD

- Provide adequate ventilation of any enclosed trailer to prevent build up of gasoline vapors, especially at floor level.
- Never refuel equipment inside an enclosed trailer.
- Be sure all fuel tanks and gasoline storage containers have proper caps installed to prevent spillage and minimize vapor escaping into the trailer.
- Do not place any equipment that is leaking gasoline in an enclosed trailer.

1.4 OPERATION

Although hazard control and accident prevention are partially dependent upon the design and configuration of the equipment, these factors are also dependent upon the awareness, concern, prudence and proper training of the personnel involved in the operation, transport, maintenance and storage of the equipment. It is essential that all Operator Safety Mechanisms be connected and in operating condition prior to use for mowing.

⚠ WARNING
POTENTIAL HAZARD ♦ Operating engine parts, especially the muffler, become extremely hot.
WHAT CAN HAPPEN ♦ Severe burns can occur on contact. ♦ Debris, such as leaves, grass, brush, etc. can catch fire.
HOW TO AVOID THE HAZARD ♦ Allow engine parts, especially the muffler, to cool before touching. ♦ Remove accumulated debris from muffler and engine area. ♦ Install and maintain in working order a spark arrester before using equipment on forest-covered, grass-covered, brush-covered unimproved land.

⚠ WARNING
POTENTIAL HAZARD ♦ Hands, feet, hair, clothing, or accessories can become entangled in rotating parts.
WHAT CAN HAPPEN ♦ Contact with rotating parts can cause traumatic amputation or severe lacerations.
HOW TO AVOID THE HAZARD ♦ Operate equipment with all guards in place. ♦ Keep hands, feet, hair, jewelry, or clothing away from rotating parts.

1.4.1 Give complete, undivided attention to the job at hand.

1.4.2 Mow only in daylight or good artificial light. ***NEVER*** carry passengers. ***DO NOT*** operate the mower when children or others are in the area.

1.4.3 When feasible, avoid operating the equipment in wet grass.

1.4.4 Use ***EXTREME*** caution when mowing and/or turning on slopes as loss of traction and/or tip-over could occur. Drive slower on slopes***.*** Progressively greater care is needed as the slope increases. ***DO NOT*** mow slopes greater than 15 degrees. Watch for ditches, holes, rocks, dips, and rises that change the operating angle. Keep away from drop-offs and steep banks. Avoid sudden starts when mowing uphill - mower may tip backwards. Loss of traction may occur going downhill - weight transfer to the front wheels may cause drive wheels to slip and cause loss of braking. ***DO NOT*** mow slopes when grass is wet - slippery conditions affect steering and reduce traction and braking. The operator is responsible for safe operation on slopes. See inside the back cover to determine the approximate slope angle of the area to be mowed.

1.4.5 Use ***EXTREME*** caution when backing up. **LOOK BEHIND YOU!**

1.4.6 Stop the blades when crossing surfaces other than grass and when transporting the mower to and from the area to be mowed.

1.4.7 Never operate the mower with damaged guards, shields, or covers. Always have safety shields, guards, switches, and other devices in place and in proper working condition.

1.4.8 ***DO NOT*** change the engine governor settings or overspeed the engine. Operating an engine at excessive speed may increase the hazard of personal injury.

1.4.9 Disengage blade drive before starting engine.

1.4.10 Start the engine carefully with feet well away from the blades.

1.4.11 Keep hands, feet and clothing away from rotating parts while the mower is being operated.

1.4.12 Stop the engine and remove ignition key:

- Before checking, cleaning or working on the mower.
- After striking a foreign object (inspect the mower for damage and make repairs before restarting and operating the mower).
- Before clearing blockages.
- Whenever you leave the mower.

Stop the engine:

- Before refueling.
- Before dumping the grass catcher.

1.4.13 Allow the engine to cool before stopping the engine.

1.4.14 The fuel system is provided with a shut-off valve. Shut off the fuel:

- When the machine will not be used for a few days.
- During transport to and from the job.
- When parked inside a building.

1.4.15 This mower was designed for one operator only. Keep all others away from mower during operation.

1.4.16 ***Do Not*** mow without the discharge chute in place.

1.4.17 If jump starting is required:

a) connect the positive (+) power cable from the positive post on the booster battery to the positive terminal post on the starter solenoid switch (this post has the positive battery cable attached to it).

b) connect the negative or ground cable (-) from the negative post on the booster battery to the engine block as far away from the battery as possible.

c) disconnect battery cables in the reverse order after starting.

1.5 MAINTENANCE AND STORAGE

1.5.1 For engine maintenance, follow the engine manufacturer's recommendations precisely as stated in the engine manual.

1.5.2 Disconnect the battery cable from the negative battery post when the unit will be allowed to sit for more than 30 days without use.

1.5.3 Allowing batteries to stand for an extended period of time without recharging them will result in reduced performance and service life. To preserve optimum battery performance and life, recharge batteries in storage when the open circuit voltage drops to 12.4 volts.

Note: To prevent damage due to freezing, battery should be fully charged before putting away for winter storage.

1.5.4 Store fuel in a container specifically designed for this purpose in a cool, dry place.

1.5.5 Keep the mower and fuel container in locked storage to prevent children from playing or tampering with them.

1.5.6 Gasoline powered equipment or fuel containers should not be stored in a basement or any enclosed area where open pilot lights or heat appliances are present.

1.5.7 Maximum mowing results and safety can only be achieved if the mower is properly maintained and operated correctly.

1.5.8 Check all bolts frequently to maintain proper tightness.

1.5.9 Keep all guards, shields and all safety devices in place and in safe working condition.

1.5.10 Frequently check for worn or deteriorating components that could create a hazard.

1.5.11 All replacement parts must be the same as or equivalent to the parts supplied as original equipment.

⚠ WARNING

POTENTIAL HAZARD

- Hydraulic fluid escaping under pressure can penetrate skin and cause injury.

WHAT CAN HAPPEN

- Fluid accidentally injected into the skin must be surgically removed within a few hours by a doctor familiar with this form of injury or gangrene may result.

HOW TO AVOID THE HAZARD

- Make sure all hydraulic fluid hoses and lines are in good condition an all hydraulic connections and fittings are tight before applying pressure to hydraulic system.
- Keep body and hands away from pinhole leaks or nozzles that eject high pressure hydraulic fluid.
- Use cardboard or paper to find hydraulic leaks.
- Safely relieve all pressure in the hydraulic system before performing any work on the hydraulic system.

For Kawasaki Liquid-Cooled units:

⚠ WARNING

POTENTIAL HAZARD

- Engine coolant is hot and pressurized.
- Radiator and surrounding parts are hot.

WHAT CAN HAPPEN

- Spray or steam from hot, pressurized liquid in the engine cooling system and touching a hot radiator may cause severe burns.

HOW TO AVOID THE HAZARD

- Allow the engine to cool completely before removing the radiator cap or servicing any component of the cooling system.

CAUTION
POTENTIAL HAZARD ♦ Engine coolant is toxic.
WHAT CAN HAPPEN ♦ Swallowing coolant can cause poisoning.
HOW TO AVOID THE HAZARD ♦ Do not swallow ♦ Keep out of reach of children and pets.

For Kohler 26 HP EFI Units:

WARNING
POTENTIAL HAZARD ♦ Fuel system components are under high pressure.
WHAT CAN HAPPEN ♦ The use of improper components can result in system failure, gasoline leakage and possible explosion.
HOW TO AVOID THE HAZARD ♦ Use only approved fuel lines and fuel filters for high pressure systems.

1.6 SAFETY SIGNS

1.6.1 Keep all safety signs legible. Remove all grease, dirt and debris from safety signs and instructional labels.

1.6.2 Safety signs must be replaced if they are missing or illegible.

1.6.3 When new components are installed, be sure that current safety signs are affixed to the replaced components.

1.6.4 New safety signs may be obtained from your authorized Exmark equipment dealer or distributor or from Exmark Mfg. Co. Inc.

1.6.5 Safety signs may be affixed by peeling off the backing to expose the adhesive surface. Apply only to a clean, dry surface. Smooth to remove any air bubbles.

1.6.6 Familiarize yourself with the following safety signs and instruction labels. They are critical to the safe operation of your Exmark commercial mower.

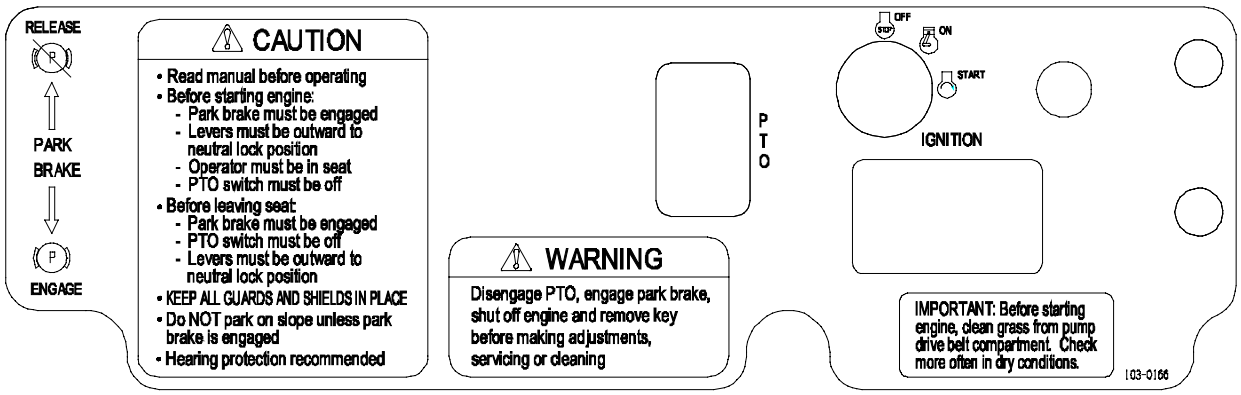

PART NO. 103-0166
LOCATION: LH Side of Console

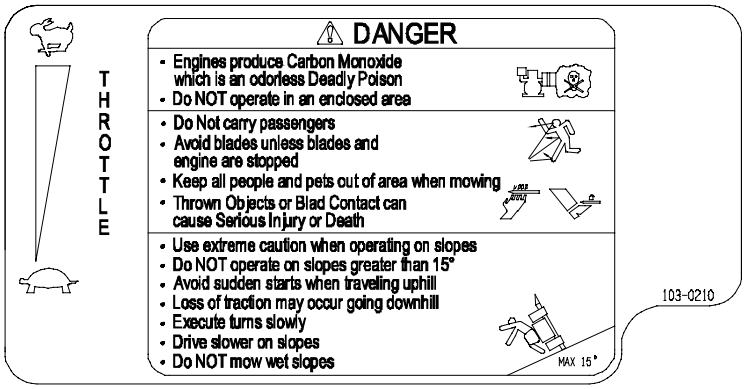

PART NO. 103-0210
LOCATION: RH Side of Console

PART NO. 65-2690
LOCATION: Top of Radiator Trim Plate
LH & RH Sides

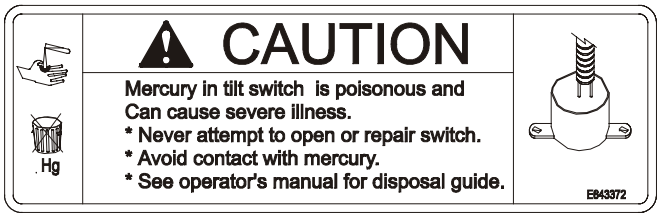

Serial Nos. 220,000 thru 251,999
PART NO. 1-643372
LOCATION: Top LH Side of Console, Under Front of Seat

Serial Nos. 220,000 and Higher
PART NO. 1-643401
LOCATION: On Tilt Switch

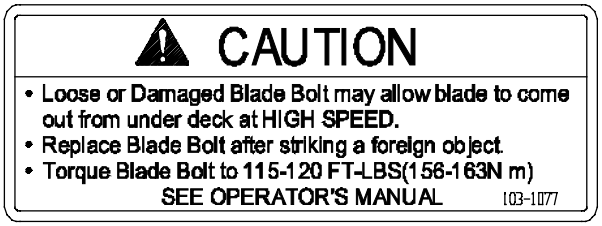

PART NO. 103-1077
LOCATION: Top LH Side of Mower Deck
next to Stiffener

PART NO. 1-403005
LOCATION: Left and Right Corners
of Mower Deck

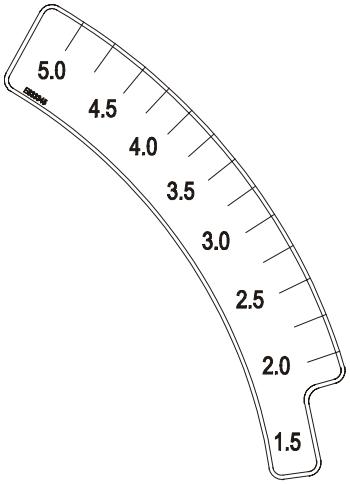

PART NO. 1-633345
LOCATION: RH Side of Cutting
Height Adjustment Plate

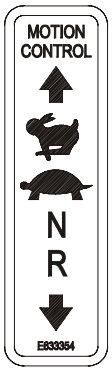

Serial Nos. 251,999 and Lower
PART NO. 1-633354
LOCATION: Top of Console

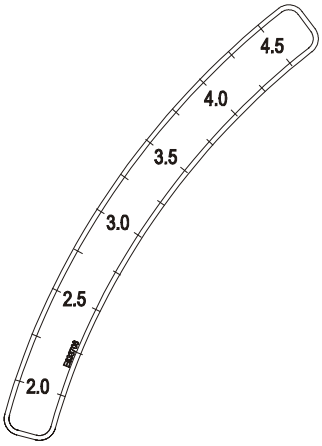

PART NO. 1-633706
LOCATION: LH Side of Cutting
Height Adjustment Plate

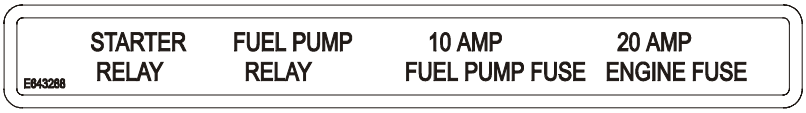

Kohler 26 HP EFI Units Only
PART NO. 1-643288
LOCATION: Panel behind LH Fuel Tank.

PART NO. 1-513748
LOCATIONS: -Rubber Heat Shield Behind Seat (serial numbers 259,9999 and lower only)
-Bottom Side of Floorpan

PART NO. 1-633313
LOCATION: RH Side on Top Front Mower Deck

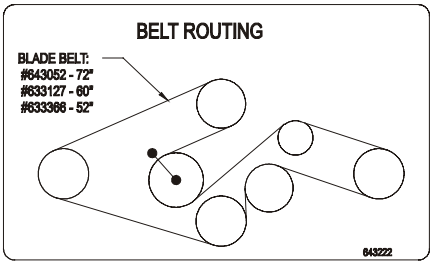

PART NO. 1-643222
LOCATION: Left of Center on Mower Deck, Under Floor Pan

PART NO. 1-513742
LOCATION: Top of Mower Deck Belt Shields, Left and Right Sides

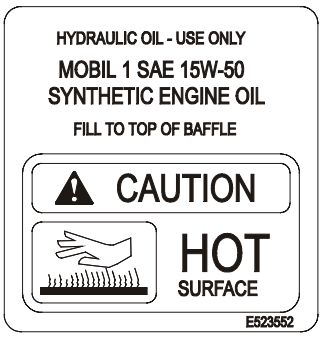

PART NO. 1-523552
LOCATION: Top of Hydraulic Reservoir, Under the Seat

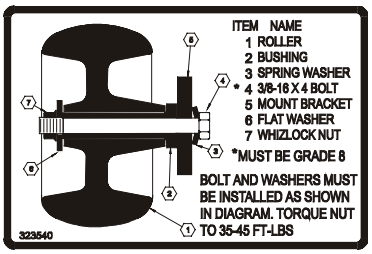

PART NO. 1-323540
LOCATION: Left Rear Corner Top of Mower Deck

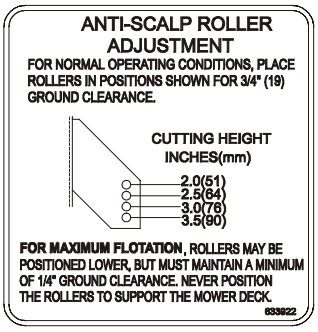

PART NO. 1-633922
LOCATION: Front Center on Top of Mower Deck

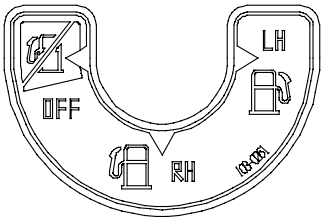

Kohler 26 HP EFI Units Only
PART NO. 103-0161
LOCATION: Below Center of Console

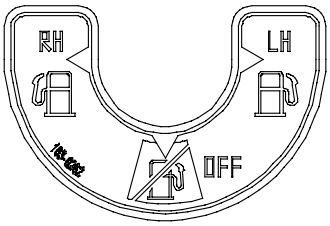

All Units except Kohler 26 HP EFI
PART NO. 103-0162
LOCATION: Below Center of Console

PART NO. 1-633462
LOCATION: Rubber Heat Shield Flap behind Seat

Kawasaki Liquid-Cooled Units Only
PART NO. 1-643253
LOCATION: LH and RH Sides of Radiator Mount Plate

PART NO. 103-0368
LOCATION: Rubber Heat Shield Flap behind Seat

⚠ WARNING

PARKING BRAKE MAY NOT HOLD WITH ADDED WEIGHT OF ACCESSORIES, ALLOWING MACHINE TO ROLL CAUSING INJURY OR PROPERTY DAMAGE. WITH ACCESSORIES INSTALLED, DO NOT PARK ON SLOPE WITH MACHINE FACING UPHILL UNLESS WHEELS ARE CHOCKED OR BLOCKED.

633827

PART NO. 1-633827
LOCATION: Top LH Side of Mower Deck Frame

⚠ WARNING

DO NOT OPERATE WITHOUT DISCHARGE DEFLECTOR OR ENTIRE GRASS COLLECTION SYSTEM IN PLACE. DO NOT REMOVE GRASS CATCHER UNTIL BLADES HAVE STOPPED.

E303508

PART NO. 1-303508
LOCATION: RH Side on Top Rear of Mower Deck

⚠ WARNING E513747

BATTERY CONTAINS SULFURIC ACID, AVOID CONTACT AND ALWAYS SHIELD EYES, FACE, SKIN AND CLOTHING FROM BATTERY. CIGARETTES, FLAMES OR SPARKS COULD CAUSE BATTERY TO EXPLODE. DO NOT CHARGE OR USE BOOSTER CABLES OR ADJUST POST CONNECTIONS WITHOUT PROPER TRAINING. IN EVENT OF AN ACCIDENT FLUSH WITH WATER AND CALL A PHYSICIAN IMMEDIATELY. KEEP OUT OF REACH OF CHILDREN.

Serial Nos. 251,999 and Lower
PART NO. 1-513747
LOCATION: Top Center of Console, Under Front of Seat

⚠ CAUTION

ALLOW ENGINE TO COOL FOR 2 MINUTES BEFORE REFUELING

E303293

PART NO. 1-303293
LOCATION: On Top of Fuel Tanks

PUMP BELT ROUTING

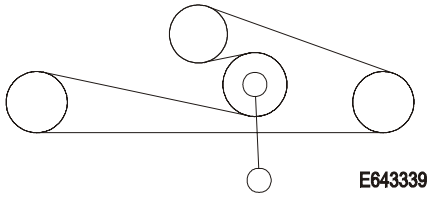

E643339

PART NO. 1-643339
LOCATION: Top of Right Engine Baffle

CHECK/SERVICE REFERENCE AID

GREASE LUBE POINTS AT INTERVALS SHOWN.
1 CHECK HYDRAULIC FLUID AT INTERVAL SHOWN. (USE ONLY MOBIL 1 15W-50 SYNTHETIC MOTOR OIL.)
2 SEE ENGINE OPERATORS MANUAL FOR SERVICING ENGINE.
3 CHECK TIRE PRESSURE - 13 PSI AT INTERVAL SHOWN.
SEE OPERATORS MANUAL FOR ADDITIONAL DETAILS

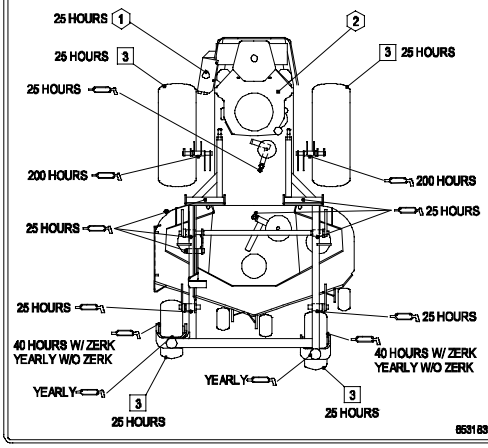

653183

PART NO. 1-633702
LOCATION: Bottom Side of Floor Pan

DRIVE WHEEL RELEASE

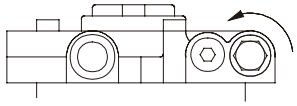

USE 5/8 WRENCH.
DO NOT OVER-TIGHTEN

E513929

Serial Nos. 251,999 and Lower
PART NO. 1-513929
LOCATION: Hydraulic Reservoir Mounting Bracket, Under the Seat

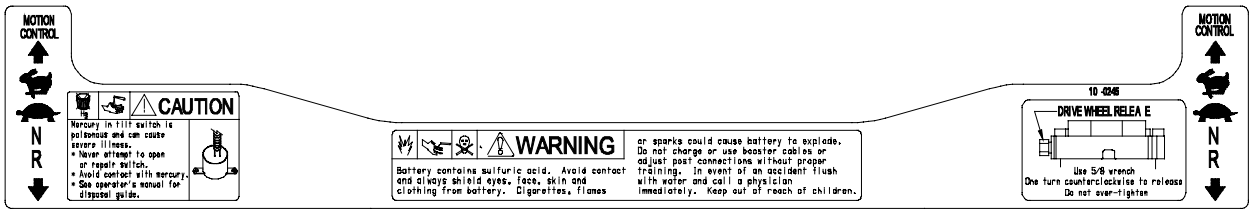

Serial Nos. 252,000 and Higher
PART NO. 103-0245
LOCATION: Top of console

2. SPECIFICATIONS

2.1 MODEL NUMBER:

Serial Nos. 160,000 – 189,999
LZ18KC523; LZ22KC523; LZ25KC523; LZ22KC603; LZ25KC603

Serial Nos. 190,000 – 219,999
LZ18KC523; LZ22KC523; LZ22LKA523; LZ23KC523; LZ25KC523; LZ22KC604; LZ22LKA604; LZ23KC604; LZ25KC604; LZ26KC604; LZ25KC724; LZ26KC724

Serial Nos. 220,000 – 259,999
LZ22LKA523; LZ23KC523; LZ25KC523; LZ22LKA604; LZ23KC604; LZ25KC604; LZ26KC604; LZ23LKA604; LZ25KC724; LZ26KC724

Serial Nos. 260,000 and Higher
LZ25KC524; LZ23LKA524; LZ23KA604; LZ23KC604; LZ25KC604; LZ26KC604; LZ23LKA604; LZ26KC724; LZ27LKA604; LZ27LKA724

2.2 ENGINE:

2.2.1 Engine Specifications: See your Engine Owner's Manual

2.2.2 RPM: 18, 22, 23, & 25 HP Kohler and 22 HP Kawasaki Liquid-cooled models
Full Speed: 3600 RPM (No Load) Idle:1500 RPM

26 HP EFI Kohler and 23 HP Kawasaki Liquid-cooled models
Full Speed: 3750 RPM (No Load) Idle:1500 RPM
27 HP Kawasaki Liquid-cooled models
Full Speed: 3750 RPM (No Load) Idle: 2200 RPM

2.3 FUEL SYSTEM

2.3.1 Capacity: 9.0 gal. (34 L.) for Serial Nos. 160,000-189,999
11.0 gal. (42 L.) for Serial Nos. 190,000 & Higher

2.3.2 Type of Fuel: Regular ***unleaded*** gasoline, 87 octane or higher

2.3.3 Fuel Filter:

Kohler Air-cooled units: In-line 15 Micron **Kohler** P/N 2405002.

Kohler 26 HP EFI units: In-line 22 Micron Exmark P/N 99-9403 (low pressure).
In-line 10 Micron **Kohler** P/N 2405003 (high pressure).

Kawasaki Liquid-cooled units: In-line 40 Micron **Kawasaki** P/N 49019-1055

Kawasaki Air-cooled units: In-line **Kawasaki** P/N 49019-7001

2.3.4 Fuel Shut-Off Valve: 1/4 turn increments (left tank, "OFF", right tank)

2.4 ELECTRICAL SYSTEM

2.4.1 Charging System: All Kohler & Kawasaki Air-cooled units - Flywheel Alternator
Kawasaki 22 & 23 HP Liquid-cooled units - External Alternator
Kawasaki 27 HP Liquid-cooled units – 3 Phase Flywheel Alternator

2.4.2 Charging Capacity: All Kohler & Kawasaki Air-cooled units - 15 amps
Kawasaki 22 & 23 HP Liquid-cooled units – 37 amps
Kawasaki 27 HP Liquid-cooled units – 30 amps

2.4.3 Battery Type: BCI Group U1

2.4.4 Battery Voltage: 12 Volt

2.4.5 Polarity: Negative Ground

2.4.6 Fuses: Kohler Air-cooled units –Two 20 amp blade type
Kohler 26 HP EFI units – Two 20 amp and one 10 amp blade type
Kawasaki 22, 23, & 27 HP Liquid-cooled units – One 20 amp and two 30 amp blade type

2.4.7 Safety Interlock System:

For Kohler units Serial Nos. 251,999 and Lower and all 22 & 23 HP Kawasaki Liquid-cooled units:

Operator must be in seat with ***Blades disengaged***, ***brake engaged***, and ***motion control levers out*** (neutral lock) ***to start engine***.

For Kohler (Serial Nos. 252,000 & Higher), all Kawasaki Air-cooled and all 27 HP Kawasaki Liquid-cooled units:

Blades must be ***disengaged***, ***brake engaged***, and ***motion control levers out*** (neutral lock) ***to start engine***. (It is not necessary for the operator to be in the seat to start the engine.)

For all units:

Operator must be in seat ***when Blades are engaged***, ***brake is disengaged***, or ***motion control levers are moved in*** or engine will stop.

Engine will stop if either the left, the right, or both levers are ***moved from neutral lock position while brake is engaged***.

2.4.8 Tilt Switch: (Serial Nos. 220,000 & Higher) Shuts off the engine when the unit is tilted more than 60° from horizontal.

2.5 COOLING SYSTEM (Kawasaki Liquid-cooled units only)

2.5.1 Fan: 22 & 23 HP units: Thermostatically controlled electric

27 HP units: Electric with continuous operation with engine running

2.5.2 Coolant Liquid:

Kawasaki 22 HP Liquid cooled: 50/50 mix of ethylene glycol and water.
Kawasaki 23 & 27HP Liquid-cooled: 50/50 mix of DexCool© extended life antifreeze and water.

2.5.3 Coolant Capacity: 4 quarts

2.6 OPERATOR CONTROLS

2.6.1 Steering and Motion Control:

Separate levers, on each side of the console, control speed and direction of travel of the respective drive wheels.

Steering is controlled by varying the position of the levers relative to each other.

Moving motion control levers outward (in slots) locks the drive system in neutral.

NOTE: Newer motion control levers are adjustable to two heights.

2.6.2 Blade Engagement Switch: Engages electric clutch (to drive belt) which engages mower blades.

2.6.3 Parking Brake Lever: Sets brakes.

2.6.4 Deck Height Adjustment Lever: Sets cutting height to desired position.

2.6.5 Deck Lift Assist Lever: *Kohler 26 HP EFI units and all 72" units* – Foot pedal that assists in raising the deck. (This lever is an optional accessory for all other units.)

2.7 SEAT

2.7.1 Type: *All units except Kohler 26 HP EFI* - Standard seat with high back, foam padded (internal suspension) and armrests.

Kohler 26 HP EFI units - Deluxe suspension seat with high back, low profile foam-in-place cushion (dampened, adjustable spring suspension) and armrests. (This seat is an optional accessory for all other units)

2.7.2 Mounting: Hinged to tilt up for access to hydraulic pumps, battery and other components. Held in tilted position with prop rod. Adjustable fore and aft seat track.

2.7.3 Armrests: Standard seat: foam padded flip-up armrests.
Serial Nos. 252,000 and Higher: Armrests with height adjustment.
Optional suspension seat: molded adjustable flip-up armrests.

2.7.4 Seat Safety Switch: Incorporated into the Safety Interlock System. Time delay seat switch eliminates rough ground cut-outs.

2.8 HYDROSTATIC GROUND DRIVE SYSTEM

2.8.1 Hydrostatic Pumps: Two Hydro Gear BDP-10L variable displacement piston pumps.

2.8.2 Wheel Motors: Two Parker/Ross with 1 1/4" tapered shafts.

2.8.3 Hydraulic Oil Type: Synthetic Mobil 1 15W-50.

2.8.4 Hydraulic Oil Capacity: 2.1 qt.(2.0 L.)

2.8.5 Hydraulic Filter: Replaceable cartridge type.

P/N 1-513211: 10 microns, 18 psi bypass (Summer use above 32° F)
P/N 1-523541: 40 microns, 18 psi bypass (Winter use below 32° F)

2.8.6 Speeds: 18, 22, 23, & 25 HP Kohler & Kawasaki Air-cooled and 22 HP Kawasaki Liquid-cooled models:

Serial Nos. 160,000-189,999	Serial Nos. 190,000 & Higher
0 - 9.0 mph (14.5 km/hr) forward.	0 - 9.4 mph (15.1 km/hr) forward.
0 - 4.2 mph (6.8 km/hr) reverse.	0 – 6.0 mph (9.7 km/hr) reverse.

26 HP Kohler EFI and 23 & 27 HP Kawasaki Liquid-cooled models:
0-9.8 mph (15.8 km/hr) forward.
0-6.3 mph (10.1 km/hr) reverse.

2.8.7 Drive wheel release valves allow machine to be moved when engine is not running.

2.9 TIRES AND WHEELS

2.9.1 Tires

	Drive	Front Cstr.
Qty:	2	2
Ply:	4	4
Infl:	13 psi (90 kPa)	13 psi (90 kPa)

Serial Nos. 160,000–189,999

Size:	23 x 10.5-12	13 x 5.00-6
Tread:	"Turfmate"	Smooth

Kohler Air-cooled Units - Serial Nos. 190,000 - 259,999

Size: w/52"Deck	23 x 9.5-12	13 x 5.00-6
Size: w/60"&72" Deck	24 x 12.0-12	13 x 6.50-6
Tread:	"Turf Master"	Smooth

Kohler and Kawasaki Air-cooled units Serial Nos. 260,000 & Higher and all Kawasaki Liquid-cooled Units

Size: w/52" Deck	23 x 9.5-12	13 x 6.50-6
Size: w/60" & 72" Deck	24 x 12.0-12	13 x 6.50-6
Tread:	"Turf Master"	Smooth

2.10 CUTTING DECK

2.10.1 Cutting Width: 72 in. (182.9 cm)
60 in. (152.4 cm)
52 in. (132.1 cm)

2.10.2 Discharge: Side

2.10.3 Blade Size: (3 ea.) w/52" Deck 18.0 in. (45.7 cm)
w/60" Deck 20.5 in. (52.1 cm)
w/72" Deck 24.5 in. (62.2 cm)

2.10.4 Blade Spindles: Solid steel spindles with1" I.D. bearings.

2.10.5 Deck Drive: Electric clutch mounted on horizontal engine shaft. “B” Section belt (with self-tensioning idler) from electric clutch to transfer shaft mounted on deck.

Blades are driven by one “B” Section belt (w/self-tensioning idler) from transfer shaft on deck to blade spindles.

2.10.6 Deck: Full floating deck is attached to out-front support frame. Six anti-scalp rollers provide maximum turf protection. Dual deck support shafts add to the stability of the deck. Deck design allows for bagging, mulching or side discharge.

Deck Depth:

52” Deck (Serial Nos. 259,999 & Lower): 5.0” (12.7 cm)
52” Deck (Serial Nos. 260,000 & Higher: 5.5” (14.0 cm)
60” Deck (Serial Nos. 160,000-189,999): 5.0” (12.7 cm)
60” Deck (Serial Nos. 190,000 & higher): 5.5” (14.0 cm)
72” Deck: 5.5” (14.0 cm)

2.10.7 Cutting Height Adjustment: an extra-long cushioned lever is used to adjust the cutting height from 1 1/2” (3.8 cm) to 5” (10.2 cm.) in 1/2”(1.3 cm.) increments for Serial Nos. 160,000-189,999 and 1/4”(.64 cm) increments for Serial No. 190,000 & higher. The cutting height adjustment handle has a transport position and all adjustments can be made while the operator remains seated. Kohler 26 HP EFI units and all 72” units also have a foot operated deck lift assist lever to aid in raising the deck. (The deck lift assist lever is an optional accessory for all other units.)

2.10.8 Mulching Kit: Optional.

2.11 Dimensions

2.11.1 Overall Width:

	without deck	***deflector up***	***deflector down***
Serial Nos. 160,000-259,999 w/52” Deck	49.8 in. (126.5 cm)	53.4 in. (135.6 cm)	63.1 in. (160.3 cm)
Serial Nos. 260,000 & Higher w/52” Deck	49.8 in. (126.5 cm)	53.4 in. (135.6 cm)	64.2 in. (163.1 cm)
Serial Nos. 160,000-189,999 w/60” Deck	53.8 in. (136.7 cm)	61.4 in. (156.0 cm)	71.0 in. (180.3 cm)
Serial Nos. 190,000 & Higher w/60” Deck	53.5 in. (135.9 cm)	61.4 in. (156.0 cm)	72.9 in. (185.2 cm)
Serial Nos. 190,000 & Higher w/72” Deck	57.3 in. (145.5 cm)	73.2 in. (185.9 cm)	84.3 in. (214.1 cm)

2.11.2 Overall Length:

All Air-cooled units - w/52” & 60” decks - 78.5 in. (199.4 cm)
w/72” deck – 82.6 in. (209.8 cm)
Kawasaki Liquid-cooled units – w/52” & 60” decks – 80.7 in. (205.0 cm)
w/72” deck – 84.8 in. (215.4 cm)

2.11.3 Overall Height:

Serial Nos. 160,000-189,999: 44 in. (111.8 cm.)
Air-cooled units Serial Nos. 190,000 & higher: 44.5 in. (113.0 cm.)
Kawasaki Liquid-cooled units – 47.7 in (121.2 cm)

2.11.4 Tread Width: (center to center of tires, widthwise)

Drive wheels:
Serial Nos. 160,000 & Higher w/52” Deck – 39.7 in. (100.1 cm)
Serial Nos. 160,000 – 189,999 w/60” Deck - 43.7 in. (111.0 cm)
Serial Nos. 190,000 & Higher w/60” Deck – 41.9 in. (106.4 cm)
Serial Nos. 190,000 & Higher w/72” Deck – 45.9 in. (116.6 cm)

Casters:
w/52” Deck – 37.0 in. (93.9 cm)
w/60” Deck – 39.0 in. (99.1 cm)
w/72” Deck – 47.6 in. (120.9 cm)

2.11.5 Wheel Base: (center of caster tire to center of drive tire)
w/52” & 60” Decks - 50.3 in. (127.8 cm)
w/72” Deck – 54.5 in. (138.4 cm)

2.11.6 Curb Weight*****

Air-cooled units:
Serial Nos. 160,000 & Higher w/52” Deck – 976 lbs. (443.6 kg)
Serial Nos. 160,000–189,999 w/60” Deck – 1000 lbs. (454.5 kg)
Serial Nos. 190,000 & Higher w/60” Deck – 1033 lbs. (469.5 kg)
Serial Nos. 190,000 & Higher w/72” Deck – 1106 lbs. (501.7 kg)

22 & 23 HP Kawasaki Liquid-cooled units:
w/52” Deck – 1,196 lbs. (542.5 kg)
w/60” Deck – 1,218 lbs. (552.5 kg)

27 HP Kawasaki Liquid-cooled units:
w/60” Deck – 1,298 lbs. (588.9 kg)
w/72” Deck – 1,306 lbs. (592.6 kg)

*** Note: Weight will vary slightly, depending on engine option.**

2.12 TORQUE REQUIREMENTS

Bolt Location	Torque
Cutter Housing Spindle Nut	75-80 ft-lbs.
Blade Mounting Bolt	115-120 ft-lbs.
Engine Deck/Front Frame Mount	30-35 ft-lbs.
Anti-Scalp Roller Bolts	40-45 ft-lbs.
Engine Mounting Bolts (Kohler)	30-35 ft-lbs.
Engine Mounting Bolts (Kawasaki)	25-30 ft-lbs.
Wheel Lug Nuts	90-95 ft-lbs.
Wheel Motor Mounting Bolts	72-77 ft-lbs.
Wheel Hub Slotted Nut	minimum125 ft-lbs.

3. ASSEMBLY INSTRUCTIONS

3.1 UNCRATE MOWER

3.2 SERVICE BATTERY.

WARNING: Battery posts, terminals, and related accessories contain lead compounds, chemicals known to the State of California to cause cancer and reproductive harm. **Wash hands after handling.**

For Serial Nos. 252,000 and higher.

The machine is shipped with a filled lead acid battery.

3.2.1 Tilt seat up to gain access to the battery.

DANGER

POTENTIAL HAZARD
- Charging the battery may produce explosive gasses

WHAT CAN HAPPEN
- Battery gasses can explode causing serious injury.

HOW TO AVOID THE HAZARD
- Keep sparks, flames, or cigarettes away from battery.
- Ventilate when charging or using battery in an enclosed space.
- Make sure venting path of battery is always open once battery is filled with acid.

3.2.2 Check the voltage of the battery with a digital voltmeter. Locate the voltage reading of the battery in the table below and charge the battery for the recommended time interval to bring the charge up to a full charge of 12.6 volts or greater.

IMPORTANT: Make sure the negative battery cables are disconnected and the battery charger used for charging the battery has an output of 16 volts and 7 amps or less to avoid damaging the battery (see chart below for recommended charger settings).

Voltage Reading	Percent Charge	Maximum Charger Settings	Charging Interval
12.6 or greater	100%	16 volts/7 amps	No Charging Required
12.4 – 12.6	75 – 100%	16 volts/7 amps	30 Minutes
12.2 – 12.4	50 – 75%	16 volts/7 amps	1 Hour
12.0 – 12.2	25 – 50%	14.4 volts/4 amps	2 Hours
11.7 – 12.0	0 – 25%	14.4 volts/4 amps	3 Hours
11.7 or less	0%	14.4 volts/2 amps	6 Hours or More

CAUTION

POTENTIAL HAZARD
- If the ignition is in the “ON” position there is potential for sparks and engagement of components.

WHAT CAN HAPPEN
- Sparks could cause an explosion or moving parts could accidentally engage causing personal injury.

HOW TO AVOID THE HAZARD
- Be sure ignition switch is in the “OFF” position before charging the battery.

3.2.3 Connect the negative battery cables.

NOTE: If the positive cable is also disconnected, connect the ***positive (red) cable and the red wire*** to the positive terminal on the battery ***first***, then connect the negative (black) cable and white/white wire to the negative terminal on the battery (red wire and white/white wire are only on some units). Slip insulator boot over the positive terminal.

NOTE: If time does not permit charging the battery, or if charging equipment is not available, connect the negative battery cables and run the vehicle continuously for 20 to 30 minutes to sufficiently charge the battery.

WARNING

BATTERY CONTAINS SULFURIC ACID, AVOID CONTACT AND ALWAYS SHIELD EYES, FACE, SKIN AND CLOTHING FROM BATTERY. CIGARETTES, FLAMES OR SPARKS COULD CAUSE BATTERY TO EXPLODE. DO NOT CHARGE OR USE BOOSTER CABLES OR ADJUST POST CONNECTIONS WITHOUT PROPER TRAINING. IN EVENT OF AN ACCIDENT FLUSH WITH WATER AND CALL A PHYSICIAN IMMEDIATELY. KEEP OUT OF REACH OF CHILDREN.

For Serial Nos. 251,999 and lower.

The machine is shipped with a dry battery.

3.2.4 Remove battery from machine. Tilt seat up to gain access to the battery. ***Disconnect*** battery cables – ***negative (black) cable first***. Remove battery hold-down and lift battery out.

3.2.5 Place battery on a level surface and remove vent caps.

DANGER

POTENTIAL HAZARD
- Battery electrolyte contains sulfuric acid, which is poisonous and can cause severe burns

WHAT CAN HAPPEN
- Swallowing electrolyte can be fatal or if it touches skin can cause severe burns.

HOW TO AVOID THE HAZARD
- Wear safety glasses to shield eyes, and rubber gloves to protect skin and clothing when handling electrolyte.
- Do not swallow electrolyte.
- Fill the battery where clean water is available for flushing skin.

DANGER

POTENTIAL HAZARD
- Charging the battery may produce explosive gasses

WHAT CAN HAPPEN
- Battery gasses can explode causing serious injury.

HOW TO AVOID THE HAZARD
- Keep sparks, flames, or cigarettes away from battery.
- Ventilate when charging or using battery in an enclosed space.
- Make sure venting path of battery is always open once battery is filled with acid.

3.2.6 Fill cells with battery grade sulfuric acid (1.265 specific gravity) to halfway between top of separators and bottom of vent well.

3.2.7 Let battery stand for 1/2 hour after filling. If battery acid level has fallen, refill to level above plates.

3.2.8 Charge the battery at 4 to 5 amps for 3-5 hours.

3.2.9 After charging, install vent caps and wash off any acid with water and dry battery.

CAUTION

POTENTIAL HAZARD
- If the ignition is in the “ON” position there is potential for sparks and engagement of components.

WHAT CAN HAPPEN
- Sparks could cause an explosion or moving parts could accidentally engage causing personal injury.

HOW TO AVOID THE HAZARD
- Be sure ignition switch is in the “OFF” position.

3.2.10 Install battery in machine and secure battery hold-down. ***DO NOT* over-tighten.**

All units except 23 HP Kawasaki Liquid-Cooled and 26 HP Kohler EFI:

Connect battery cables - ***positive (red) cable*** to the positive battery terminal ***first***, then the negative (black) cable and green/white wire to the negative battery terminal. Slip insulator boot over the positive terminal.

23 HP Kawasaki Liquid-Cooled and 26 HP Kohler EFI units:

Connect battery cables - ***positive (red) cable and red wire*** to the positive battery terminal ***first***, then the negative (black) cable and white/white wire to the negative battery terminal. Slip insulator boot over the positive terminal.

NOTE: If time does not permit charging the battery, or if charging equipment is not available, follow steps 3.2.4 through 3.2.7 and install as described in 3.2.10. Then run the vehicle continuously for 20 to 30 minutes to sufficiently charge the battery.

After charging, if battery acid level has fallen, refill battery with clean drinking water (distilled water is preferred – if available).

3.3 INSTALL DRIVE WHEELS.

3.3.1 Mount drive wheels with the valve stem to the outside of the unit. Secure using four (4) 1/2-20 x 7/8” UNF wheel bolts (installed in hubs) or 1/2-20 wheel nuts (installed on studs in hubs) for each wheel. Torque to 95 ft-lbs (128 N·M).

NOTE: Earlier models require the UNF wheel bolts. Later models have studs installed in the wheel hub and require wheel nuts.

3.4 CHECK TIRE PRESSURE.

3.4.1 Check tire pressure in caster and drive tires. Proper inflation pressure for all four (4) tires is 13 psi (90 kPa). Adjust if necessary.

3.5 INSTALL SEAT RETAINING ROD (Standard Seat) or SEAT (Suspension Seat)

3.5.1 *For all units with a standard seat*: Tilt seat up. Remove 5/16” nyloc nut from bolt attaching seat retaining rod to seat frame. Remove ignition keys attached to bolt. Remove retaining rod from seat and insert the “L” shaped end of the rod into the hole directly above the left-side hydraulic pump mounting hardware (the “L” must be positioned to the right). Position the seat retaining rod to the outside of the mounting tab on the seat frame and secure with 5/16”x 1” bolt and nut. Tighten until snug, then loosen just enough so the rod pivots freely.

For all units with a suspension seat: The seat base frame with adjustable tracks and seat retaining rod are already attached to the unit. Remove the suspension seat from front of crate and discard the hardware. Position the seat with the front set of holes on the studs in the adjustable tracks; be sure the left and right tracks are aligned (See Fig.1). Note: newer seats only have one set of holes. Loosen the vinyl curtain frame at the rear by pushing down and ahead out of the hole. Secure the seat with four 5/16 whizlock nuts. Reattach the vinyl curtain frame. Connect the terminal at the end of the wire tied to the seat frame to the switch in the bottom of the seat.

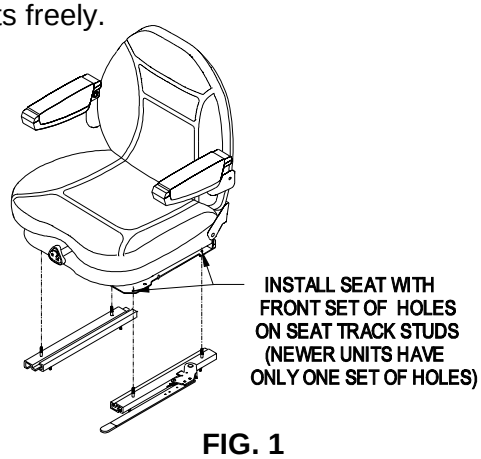

FIG. 1 SUSPENSION SEAT INSTALLATION

3.6 INSTALL FOOT LIFT ASSIST (Kohler 26 HP EFI and 72” deck units only)

a) Remove the lift assist arm from the rear deck lift arm or the seat base frame (the lift assist is fastened in this position for shipping only) and attach to the front deck lift arm as shown in Fig. 2.

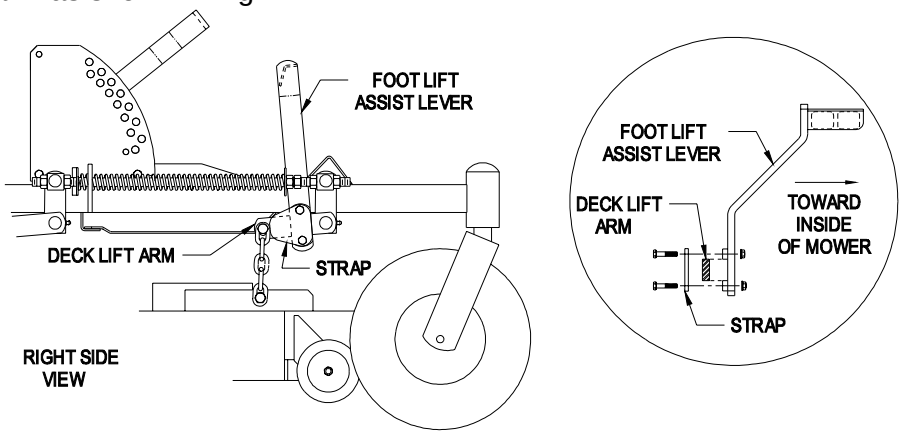

FIG. 2
LEVER ALIGNMENT

3.7 INSTALL CANISTER AIR CLEANER. (Kohler 26 HP EFI units only)

a) Remove air cleaner (with bracket attached) from crate. Keep air cleaner and mounting bracket together.

b) Remove the top two valve cover mounting screws from both left and right side engine valve covers. Keep screws for re-attaching air cleaner.

c) Position the air cleaner assembly over the engine, aligning air cleaner bracket holes with top holes in the valve covers. Reinstall valve cover screws through air cleaner bracket and torque to 70 in. lb. (4.9 N-m).

d) Remove plastic plugs from air intake elbow on engine and air cleaner hose. Adjust the air cleaner and hose as required and connect intake hose to air cleaner outlet. Position and tighten the two hose clamps to secure the hose connections.

e) Secure air cleaner by tightening the tensioning bolt and spring assembly until ends of clamp are approximately ½” (12.7 mm) apart.

f) If the unit has a filter minder, rotate the air intake elbow as needed to create enough clearance between the filter minder and the oil filler cap to remove and replace the oil filler cap easily. See Figure 3.

NOTE: The filter minder must clear the lift lug. If necessary, bend the lift lug towards the back of the machine to gain clearance for the filter minder.

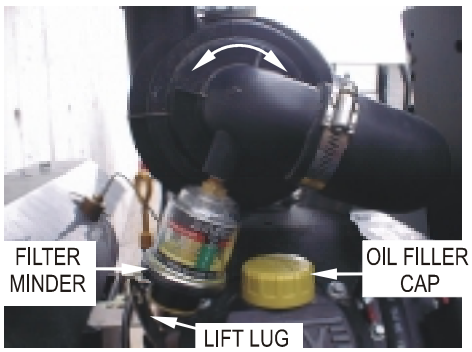

FIG. 3
CONTROL ARM SHAFT

3.8 INSTALL MOTION CONTROL LEVERS.

3.8.1 Loosen and remove the two (2) 3/8” x 1” bolts and spring disc washers which attach the motion control levers to the control arm shafts for shipping and the two (2) 3/8” x 1” bolts and spring disc washers which are screwed into the control arm shafts.

a) Install the left motion control lever onto the control arm shaft (See Fig.4) on the left side of the console. Place the lever (with the mounting plate towards the rear) on the **outside** of the control arm shaft and secure with the bolts and washers. Position the lever so the bolts are in the center of the slots on the lever mounting plate and tighten until snug. Repeat on opposite side of unit.

NOTE: There are two lever height options available on newer units. Place the levers in the top two holes to increase height of the levers, or in the bottom two holes to decrease the height of the levers.

If the levers do not align with each other, when in the neutral position, (See Fig. 5) loosen the hardware and make the appropriate adjustment by sliding/tilting the lever(s) forward or backward until properly aligned and tighten hardware.

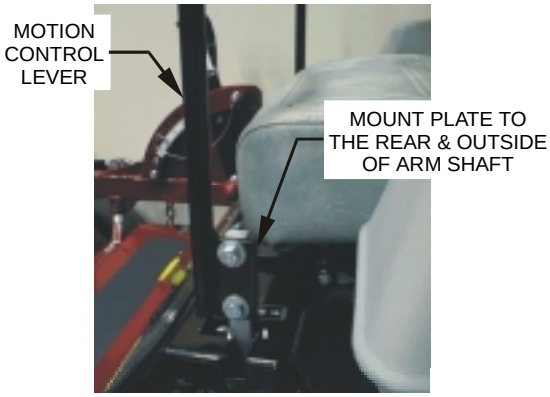

FIG. 4
CONTROL ARM SHAFT

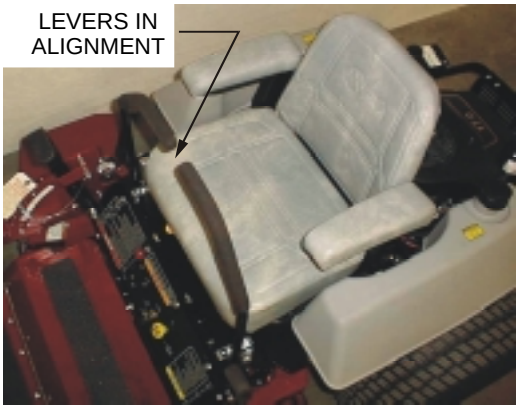

FIG. 5
LEVER ALIGNMENT

b) If the ends of the levers hit against each other, while in the drive position (levers rotated in as far as possible), make adjustments by moving the levers outwards to the neutral lock position and carefully bend them outward. Move them back to the drive position and check for clearance, repeat if necessary.

3.9 POSITION DISCHARGE CHUTE.

3.9.1 Loosen two (2) 5/16” nyloc nuts attaching discharge chute. Lower the discharge chute into position. Retighten nyloc nuts until chute is snug but can pivot freely.

3.10 SERVICE ENGINE.

Engine is shipped with oil; check oil level and if necessary fill to the appropriate level with SAE 10W-30 or 10W-40, AP1 service class SF or SG for operating in temperatures above 0° F (-18° C). See Engine Operator's Manual.

3.11 SERVICE ENGINE COOLANT (Kawasaki Liquid-cooled Units Only)

Machine is shipped filled with engine coolant.

⚠ WARNING
POTENTIAL HAZARD ♦ Engine coolant is hot and pressurized. ♦ Radiator and surrounding parts are hot.
WHAT CAN HAPPEN ♦ Spray or steam from hot, pressurized liquid in the engine cooling system and touching a hot radiator may cause severe burns.
HOW TO AVOID THE HAZARD ♦ Allow the engine to cool completely before removing the radiator cap or servicing any component of the cooling system.

⚠ CAUTION
POTENTIAL HAZARD ♦ Engine coolant is toxic.
WHAT CAN HAPPEN ♦ Swallowing coolant can cause poisoning.
HOW TO AVOID THE HAZARD ♦ Do not swallow ♦ Keep out of reach of children and pets.

With machine on **level surface** and with **cool engine**, remove radiator cap (under hood) and add a 50/50 mix of water and engine coolant (as specified in Section 2.5.2) until liquid level is as high as possible without overflowing. Reinstall radiator cap, making sure that the cap is completely seated by pressing down firmly while turning until the cap stops. Add 50/50 coolant mix to overflow bottle on the left side of the engine as required to bring the level up to the indicator line on the bottle.

NOTE: Kawasaki 23 & 27 HP Liquid-cooled units should only be filled with Dex-Cool© extended life coolant. Dex-Cool© extended life coolant can be identified by its orange color.

3.12 SERVICE HYDRAULIC OIL

The machine is shipped with hydraulic oil filled to the top the baffle in the reservoir. Run the machine for approximately 15 minutes to allow any extra air to purge out of the hydraulic system. Check hydraulic reservoir and if necessary fill the reservoir to the appropriate level with Mobil 1 15W-50 synthetic motor oil.

4. OPERATION INSTRUCTIONS

4.1 CONTROLS

4.1.1 Familiarize yourself with all controls before operating the mower.

4.1.2 Motion Control Levers: Located on each side of the console. The left lever controls the flow of hydraulic oil from the left hydrostatic pump to the left drive wheel motor. The right lever controls the flow of hydraulic oil from the right hydrostatic pump to the right drive wheel motor.

IMPORTANT: To begin movement (forward or backward) the operator must be in the seat, the brake lever must be disengaged (pushed down) before the motion control levers can be moved in or the engine will kill.

When levers are centered in the T-slot the drive system is in the neutral position. With levers moved out in the T-slot the drive system is in the ***neutral lock*** position (See Fig. 6).

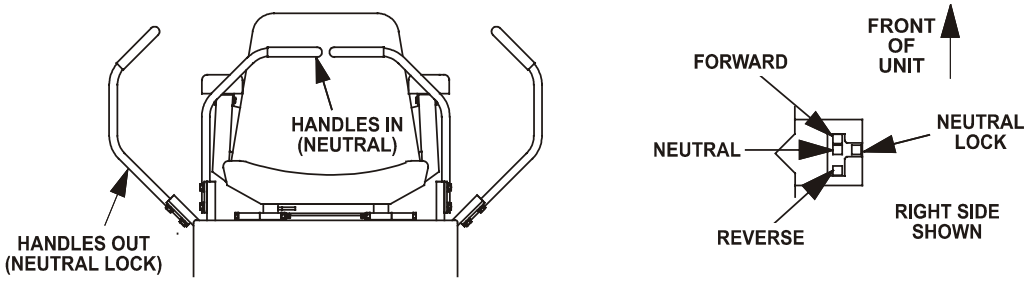

FIG. 6
MOTION CONTROL POSITIONS

By moving both levers an ***equal*** amount forward or back from the neutral position the machine can be caused to move forward or backward in a straight line.

Movement of the ***left lever forward*** will cause the ***left drive wheel*** to rotate in a forward direction. Movement of the ***right lever forward*** will cause the ***right drive wheel*** to rotate in a forward direction. To ***stop*** forward travel, pull the levers back to the neutral position.

To ***turn left*** while moving forward, move the ***left lever*** back toward neutral to slow the left drive wheel.

To ***turn right*** while moving forward, move the ***right lever*** back toward neutral to slow the right drive wheel.

To make a ***zero turn*** to the ***left***, pull the left lever back beyond neutral while holding the right lever slightly ahead of neutral.

To make a ***zero turn*** to the ***right***, pull the right lever back beyond neutral while holding the left lever slightly ahead of neutral.

Pulling the ***levers back*** from the neutral position will cause the respective drive wheels to rotate in a ***reverse*** direction (spring tension can be felt when moving into reverse from neutral).

To turn to the left while backing, move the left lever forward toward neutral. To turn to the right while backing, move the right lever forward toward neutral.

⚠ **CAUTION**
POTENTIAL HAZARD ♦ Machine can spin very rapidly by positioning one lever too much ahead of the other.
WHAT CAN HAPPEN ♦ Operator may lose control of the machine, which may cause damage to the machine or injury.
HOW TO AVOID THE HAZARD ♦ Use caution when making turns. ♦ Slow the machine down before making sharp turns.

4.1.3 Blade Engagement Switch: Located just left of center on the console (left side of ignition switch). Switch must be ***pulled out*** to the "**ROTATE**" position to engage the blades. Switch is pushed in to the "**STOP**" position to stop the blades.

4.1.4 Choke Control: (All units except Kohler 26 HP EFI) Located at lower center of console (right side of ignition switch). Choke is used to aid in starting a cold engine. The choke control is ***pulled out*** to be in the "**ON**" position and ***pushed in*** to be in the "**OFF**" position. ***DO NOT*** run a warm engine with choke in the "ON" position.

4.1.5 Throttle Control: Located on console just right of center.
Throttle is used to control engine speed. Moving throttle lever ***forward*** will increase engine speed and moving throttle lever ***to the rear*** will decrease engine speed.

4.1.6 Brake Lever: Located on left side of unit, just to the front of the console. The brake lever engages a parking brake on the drive wheels.

Pull the lever up and ***rearward*** to ***engage*** the brake.

Push the lever ***forward*** and ***down*** to ***disengage*** the brake.

When parking on a steep slope, the wheels must be chocked or blocked in addition to the brake being engaged. The unit must be tied down and brake engaged when transporting.

4.1.7 Ignition Switch: Located on the lower center of console.

The ignition switch is used to start and stop the engine. The switch has three positions "OFF", "ON" and "START". Insert key into switch and rotate clockwise to the "ON" position. Rotate clockwise to the next position to engage the starter (key must be held against spring pressure in this position).

For Kohler units Serial Nos. 251,999 and Lower and 22 & 23 HP Kawasaki Liquid-cooled units:

Operator must be in seat with brake engaged, motion control levers out (neutral lock position) and blade engagement switch "OFF" to start engine.

For Air-cooled units Serial Nos. 252,000 and Higher and 27 HP Kawasaki Liquid-cooled units:

Brake must be engaged, motion control levers out (neutral lock position) and blade engagement switch "OFF" to start engine. (It is not necessary for the operator to be in the seat to start the engine.)

4.1.8 Hour Meter: Located left on center of console. The hour meter is connected to a pressure switch installed in the engine block and it records the number of hours that the engine has run. If the ignition switch is left on without engine running, hour meter will not run.

NOTE: This switch is not a low oil sensor and will not alert the operator if the engine oil is low.

4.1.9 Fuel Shut-Off Valve: Located directly below center of console. The fuel shut-off valve is used to shut off the fuel when the machine will not be used for a few days, during transport to and from the job site, and when parked inside a building. The valve has three positions, each position made in 1/4 turn increments.

NOTE: The positions for the Kohler 26 HP EFI units are different than all other units. Reference the table below for the correct locations.

FUEL FLOW	VALVE POSITION	
	Carburetor engines	26 hp, EFI engine
"OFF"	DOWN	RIGHT
RIGHT TANK	RIGHT	DOWN
LEFT TANK	LEFT	LEFT

4.1.10 Drive Wheel Release Valves: Located on the top left front corner of hydrostatic pumps. Drive wheel release valves are used to release the hydrostatic drive system to allow the machine to be pushed without the engine running. Tilt seat up to gain access to pumps.

With a 5/8 wrench, turn both valves one turn counter-clockwise to release drive system. Turn clockwise to reset system. ***DO NOT overtighten. DO NOT tow machine.***

4.1.11 Electronic Control Unit Malfunction Indicator: (Kohler 26 HP EFI units only) The electronic control unit (ECU) continuously monitors operation of the EFI system. If a problem or fault within the system is detected, the malfunction indicator light (MIL) is illuminated. The MIL is the red light located on the control console between the key switch and the throttle controls. Follow the troubleshooting steps outlined in the Kohler engine operator's manual if the MIL is illuminated.

4.2 PRE-START

4.2.1 Fill fuel tanks. For best results use only clean, fresh regular grade ***unleaded*** gasoline with an octane rating of 87 or higher. Regular grade leaded gasoline may also be used; however, combustion chamber and cylinder head will require more frequent service. See Engine Owner's Manual.

DO NOT add oil to gasoline.

DO NOT overfill fuel tank. Never fill the fuel tank so that the fuel level rises above a level that is 1/2" below the bottom of the filler neck to allow for fuel expansion and prevent fuel spillage.

IMPORTANT: The fuel system for Kohler 26 HP EFI units must be purged of all air prior to start up if the engine has been allowed to run out of gas or the system has been disassembled. See Section 5.1.24 for fuel priming (air purging) instructions.

4.2.2 Make sure you understand the controls, their locations, their functions, and their safety requirements.

4.2.3 Refer to Maintenance, Section 5, and perform all the necessary inspection and maintenance steps.

4.3 MOWING

4.3.1 Open fuel shut-off valve (left or right tank).

4.3.2 Starting Engine:

For Kohler units Serial Nos. 251,999 and Lower and 22 & 23 HP Kawasaki Liquid-cooled units:

Operator must be in seat with brake engaged, motion control levers out (neutral lock position) and blade engagement switch "OFF" to start engine.

For Air-cooled units Serial Nos. 252,000 and Higher and 27 HP Kawasaki Liquid-cooled units:

Brake must be engaged, motion control levers out (neutral lock position) and blade engagement switch "OFF" to start engine. (It is not necessary for the operator to be in the seat to start the engine.)

On a ***cold*** engine, place the ***throttle midway*** between the "SLOW" and "FAST" positions and pull ***choke*** (except Kohler 26 HP EFI units) to the "ON" position. Turn ignition switch to the "start" position. Release the switch as soon as the engine starts.

IMPORTANT: ***DO NOT*** **crank the engine continuously for more then ten (10) seconds at a time. If the engine does not start, allow a 60 second cool-down period between starting attempts. Failure to follow these guidelines can burn out the starter motor.**

After starting a cold engine (except Kohler 26 HP EFI units), gradually return choke to the "OFF" position as the engine warms up.

On a ***warm*** engine, place the ***throttle midway*** between the "SLOW" and "FAST" positions and leave the ***choke*** in the "OFF" position.

4.3.3 Engaging Electric Blade Clutch: The electric blade clutch push-pull switch engages the cutting blades. Be sure that ***all*** persons are ***clear*** of the mower deck and discharge area ***before engaging*** cutting blades.

IMPORTANT: Operator must be in seat before the blades can be engaged.

Set throttle to "midway" position. Pull outward on the switch to the “ROTATE” position. Accelerate to full throttle to begin mowing.

4.3.4 Stopping Electric Blade Clutch: Set throttle to the “idle” position. Push in on the switch to the “STOP” position stopping the cutting blades.

4.3.5 Stopping Engine: Bring unit to a ***full stop***. ***Disengage*** the cutting blades, ***move motion control levers out*** to the ***neutral lock*** position and ***set parking brake***.

Kawasaki engines: Before stopping the engine, lower the engine speed to an idle. Keep on running at idle for about one minute; then stop the engine.

Kohler engines: Before stopping the engine, place the throttle control **midway** between the “slow” and “fast” positions. Allow the engine to run a minimum of 15 seconds; then stop the engine.

Rotate ignition switch to “OFF” position. Remove the key to prevent children or other unauthorized persons from starting engine.

Close fuel shut-off valve when machine will not be used for a few days, when transporting, and when the unit is parked inside a building.

4.4 TRANSPORTING

4.4.1 Transporting a Unit: Use a heavy-duty trailer or truck to transport the machine. Lock brake and block wheels. Securely fasten the machine to the trailer or truck with straps, chains, cable, or ropes. Be sure that the trailer or truck has all necessary lighting and marking as required by law. Secure a trailer with a safety chain.

⚠ CAUTION
POTENTIAL HAZARD ♦ This unit does not have proper turn signals, lights, reflective markings, or a slow moving vehicle emblem. These items are required to drive on a public street or roadway.
WHAT CAN HAPPEN ♦ Driving on a street or roadway without such equipment is dangerous and can lead to accidents causing personal injury. ♦ Driving on a street or roadway without such equipment may also be a violation of State laws and the operator may be subject to traffic tickets and/or fines.
HOW TO AVOID THE HAZARD ♦ Do not drive a unit on a public street or roadway.

⚠ WARNING

POTENTIAL HAZARD

- Loading a unit on a trailer or truck increases the possibility of backward tip-over.

WHAT CAN HAPPEN

- Backward tip-over of the unit could cause serious injury or death.

HOW TO AVOID THE HAZARD

- Use extreme caution when operating a unit on a ramp.
- Use only a single, full width ramp; DO NOT use individual ramps for each side of the unit.
- If individual ramps must be used, use enough ramps to create an unbroken ramp surface wider than the unit.
- DO NOT exceed a 15° angle between ramp and ground or between ramp and trailer or truck.
- Avoid sudden acceleration while driving unit up a ramp to avoid tipping backward.
- Avoid sudden deceleration while backing unit down a ramp to avoid tipping backward.

⚠ WARNING

POTENTIAL HAZARD

- Gasoline vapor can collect inside enclosed trailers and may be ignited by electrical sparks or hot engine/exhaust components.

WHAT CAN HAPPEN

- Explosion and fire may occur, resulting in property damage, personal injury and/or death.

HOW TO AVOID THE HAZARD

- Provide adequate ventilation of any enclosed trailer to prevent build up of gasoline vapors, especially at floor level.
- Never refuel equipment inside an enclosed trailer.
- Be sure all fuel tanks and gasoline storage containers have proper caps installed to prevent spillage and minimize vapor escaping into the trailer.
- Do not place any equipment that is leaking gasoline in an enclosed trailer.

4.4.2 Loading a Unit: Use extreme caution when loading units on trailers or trucks. One full width ramp that is wide enough to extend beyond the rear tires is recommended instead of individual ramps for each side of the unit. The lower rear section of the tractor frame extends back between the rear wheels and serves as a stop for tipping backward. Having a full width ramp provides a surface for the frame members to contact if the unit starts to tip backward. If it is not possible to use one full width ramp, use enough individual ramps to simulate a full width continuous ramp.

Ramp should be long enough so that the angles between the ramp and the ground and the ramp and the trailer or truck do not exceed 15°. A steeper angle may cause mower deck components to get caught as the unit moves from ramp to trailer or truck. Steeper angles may also cause the unit to tip backward. If loading on or near a slope, position the trailer or truck so it is on the down side of the slope and the ramp extends up the slope. This will minimize the ramp angle. The trailer or truck should be as level as possible.

DO NOT attempt to turn the unit while on the ramp, you may lose control and drive off the side.

Avoid sudden acceleration when driving up a ramp and sudden deceleration when backing down a ramp. Both maneuvers can cause the unit to tip backward.

5. MAINTENANCE & ADJUSTMENTS

5.1 PERIODIC MAINTENANCE

5.1.1 Check engine oil level:

Service Interval: Daily

a) Make sure engine is stopped and on a level surface.

b) For Kawasaki Liquid-Cooled units – tilt seat up and tilt hood forward to gain access to the engine area.

c) Check with engine cold.

d) Clean area around dipstick. Remove dipstick and wipe oil off. Reinsert the dipstick and push it all the way down into the tube. Remove the dipstick and read the oil level.

e) If the oil level is low, wipe off the area around the oil fill cap, remove cap and fill to the “F” mark on the dipstick. Use oil as specified in Engine Owner’s Manual. ***DO NOT*** overfill.

IMPORTANT*: DO NOT* operate the engine with the oil level below the “L” mark on the dipstick, or over the “F” mark.

5.1.2 Check engine coolant level (Kawasaki Liquid-cooled units only)

Service Interval: Daily

a) Make sure engine is stopped and machine is positioned on a level surface.

b) Tilt seat up and tilt hood forward to gain access to the cooling area.

c) Check with engine cold.

d) View coolant level in overflow bottle on the left side of the engine. Coolant level should be at the indicator line on the overflow bottle.

e) If the coolant level is low, remove the cap to the overflow bottle and fill to the indicator line. Use coolant specified in Section 2.5.2.

NOTE: Kawasaki 23 & 27 HP Liquid-cooled units should only be filled with Dex-Cool© extended life coolant. Dex-Cool© extended life coolant can be identified by its orange color.

⚠ WARNING

POTENTIAL HAZARD
- Engine coolant is hot and pressurized.
- Radiator and surrounding parts are hot.

WHAT CAN HAPPEN
- Spray or steam from hot, pressurized liquid in the engine cooling system and touching a hot radiator may cause severe burns.

HOW TO AVOID THE HAZARD
- Allow the engine to cool completely before removing the radiator cap or servicing any component of the cooling system.

⚠ CAUTION

POTENTIAL HAZARD
- Engine coolant is toxic.

WHAT CAN HAPPEN
- Swallowing coolant can cause poisoning.

HOW TO AVOID THE HAZARD
- Do not swallow
- Keep out of reach of children and pets.

5.1.3 Check battery charge:

Service Interval: Monthly

Allowing batteries to stand for an extended period of time without recharging them will result in reduced performance and service life. To preserve optimum battery performance and life, recharge batteries in storage when the open circuit voltage drops to 12.4 volts.

Note: To prevent damage due to freezing, battery should be fully charged before putting away for winter storage.

a) Check the voltage of the battery with a digital voltmeter. Locate the voltage reading of the battery in the table below and charge the battery for the recommended time interval to bring the charge up to a full charge of 12.6 volts or greater.

IMPORTANT: Make sure the negative battery cables are disconnected and the battery charger used for charging the battery has an output of 16 volts and 7 amps or less to avoid damaging the battery (see chart below for recommended charger settings).

Voltage Reading	Percent Charge	Maximum Charger Settings	Charging Interval
12.6 or greater	100%	16 volts/7 amps	No Charging Required
12.4 – 12.6	75 – 100%	16 volts/7 amps	30 Minutes
12.2 – 12.4	50 – 75%	16 volts/7 amps	1 Hour
12.0 – 12.2	25 – 50%	14.4 volts/4 amps	2 Hours
11.7 – 12.0	0 – 25%	14.4 volts/4 amps	3 Hours
11.7 or less	0%	14.4 volts/2 amps	6 Hours or More

IMPORTANT: For 26 HP Kohler EFI units, unplug the harness from the ECU before performing any welding on the equipment.

5.1.4 Clean engine cooling system:

Service Interval: Daily or more often in dry conditions

⚠ CAUTION
POTENTIAL HAZARD ♦ Excessive debris and damaged or missing rubber baffles can cause the engine and hydraulic system to overheat.
WHAT CAN HAPPEN ♦ Excessive debris around the engine cooling air intake and inside of the pump drive belt compartment can create a fire hazard.
HOW TO AVOID THE HAZARD ♦ Clean all debris from inside of pump drive belt compartment daily.

IMPORTANT:
BEFORE STARTING ENGINE CLEAN GRASS FROM PUMP DRIVE BELT COMPARTMENT. CHECK MORE OFTEN IN DRY CONDITIONS. E633462

Information located:
- On console decal 103-0166 behind ignition switch
- On decal 1-633462 behind seat on rubber heat shield flap

a) Stop engine and remove key.
b) Air-cooled units - Clean all debris from rotating engine air intake screen and from around engine shrouding.
c) Clean all debris from inside of pump drive belt compartment.
d) Air-cooled units - Inspect rubber engine baffles for proper fit. Replace if necessary.
e) Kawasaki Liquid-cooled units – Wipe debris from screen in engine cover. Rotate engine cover forward and wipe debris from radiator core as required. Inspect seals in engine cover and replace as necessary.

5.1.5 Clean grass build-up under deck.

Service Interval: Daily

a) Stop engine and remove key.
b) Raise deck to the transport (5” cutting height) position. Lift the front of unit and support unit using jack stands or equivalent support.

⚠ CAUTION
POTENTIAL HAZARD ♦ Raising the mower deck for service or maintenance relying solely on mechanical or hydraulic jacks could be dangerous.
WHAT CAN HAPPEN ♦ The mechanical or hydraulic jacks may not be enough support or may misfunction allowing the unit to fall, which could cause injury.
HOW TO AVOID THE HAZARD ♦ DO NOT rely solely on mechanical or hydraulic jacks for support. Use adequate jack stands or equivalent support.

c) Clean out any grass build-up from underside of deck and in discharge chute.

5.1.6 Check mower blades.

Service Interval: Daily

a) Stop engine and remove key.

b) Lift deck and secure in raised position as stated in Section 5.1.5.

c) Inspect blades and sharpen or replace as required.

d) Re-install the blades (if they were removed) by placing a block of wood between the front or rear baffles and the blade then torquing the blade bolts to 115-120 ft. lbs. Be sure the spring disk washer cone is installed toward the bolt head (See Figure 7).

⚠ CAUTION

POTENTIAL HAZARD

- Operating a mower deck with loose or weakened blade bolts can be dangerous.

WHAT CAN HAPPEN

- A loose or weakened blade bolt could allow a blade rotating at a high speed to come out from under the deck, causing serious injury or property damage.

HOW TO AVOID THE HAZARD

- Replace the blade bolt after striking a foreign object. Use only the following replacement parts:
  52” & 60” decks Serial Nos. 259,999 & lower
  Blade bolt – PN 103-1026
  Spring disc washer – PN 1-513208
  52” & 60” decks Serial Nos. 260,000 & higher & all 72” units
  Blade bolt – PN 103-0862
  Spring disc washer – PN 103-0865
- DO NOT lubricate the threads of the bolt or spindle before assembly.
- Torque the blade bolt to 115-120 ft. lbs.

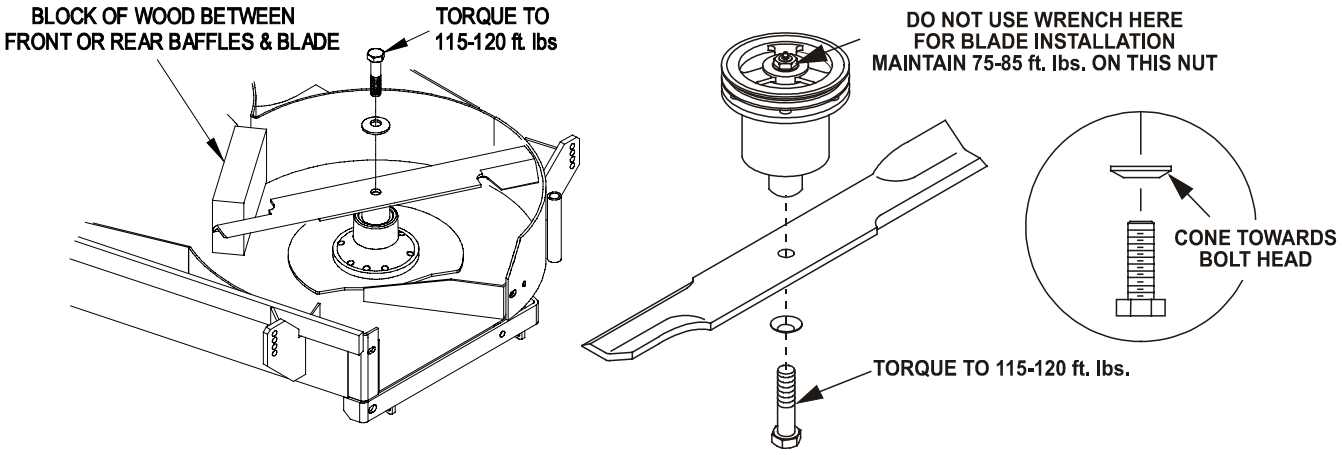

FIG. 7
BLADE BOLT INSTALLATION

5.1.7 Check safety interlock system.

Service Interval: Daily

For Kohler units with Serial Nos. 251,999 and Lower and all 22 & 23 HP Kawasaki Liquid-cooled units:

a) Check starting circuit. Starter ***should*** crank with ***operator in seat***, parking brake ***engaged,*** cutting blades ***disengaged*** and motion control levers moved out in the ***neutral lock*** position.

Try to start with ***operator out of seat***, parking brake ***engaged***, blades ***disengaged*** and motion control levers in ***neutral lock*** position - starter ***must not crank***.

For Air-cooled units Serial Nos. 252,000 and Higher and 27 HP Kawasaki units:

b) Check starting circuit. Starter ***should*** crank with, parking brake ***engaged,*** cutting blades ***disengaged*** and motion control levers moved out in the ***neutral lock*** position. The operator does not need to be in the seat to start the engine.

For All units:

Try to start with ***operator in seat***, parking brake ***disengaged,*** blades ***disengaged*** and motion control levers in the ***neutral lock*** position - starter ***must not crank***.

Try to start with ***operator in seat***, parking brake ***engaged,*** blades ***engaged*** and motion control levers in the ***neutral lock*** position - starter ***must not crank***.

Try to start with ***operator in seat***, parking brake ***engaged,*** blades ***disengaged, and the left motion control lever in,*** starter ***must not crank,*** repeat again with the ***right lever in***, then with ***both levers in*** - starter ***must not crank.***

c) Check the kill circuits. Run engine at one-third throttle, ***disengage*** parking brake and ***raise off*** of seat (but do not get off of machine) engine ***must stop*** after approx. 1/2 second has elapsed (seat has time delay kill switch to prevent cut-outs on rough terrain).

Run engine at one-third throttle, ***engage cutting blades*** and ***raise off*** of seat (but do not get off of machine) engine ***must stop*** after1/2 second has elapsed.

Run engine at one-third throttle, with brake disengaged, move levers in and raise off seat (but do not get off of machine) engine ***must stop*** after 1/2 second has elapsed.

Again, run engine at one-third throttle, brake ***engaged,*** and move ***left motion control lever in*** - engine ***must stop.*** Repeat again moving the ***right lever in***, then moving ***both levers in*** - engine ***must stop*** whether operator is ***on seat or not***.

NOTE*: If machine does not* pass any of these tests, do not operate. Contact your authorized EXMARK SERVICE DEALER.

IMPORTANT: It is essential that operator safety mechanisms be connected and in proper operating condition prior to use for mowing.

5.1.8 Check for loose hardware.

Service Interval: Daily

a) Stop engine and remove key.

b) Visually inspect machine for any loose hardware or any other possible problem. Tighten hardware or correct the problem before operating.

5.1.9 Service air cleaner.

For Kohler and Kawasaki Air-cooled units with Standard air cleaner:
Service Interval: 25 hrs.
more often under severe conditions.

a) Stop engine and remove key.

b) Loosen wing nut and remove air cleaner compartment cover.

c) Remove foam pre-cleaner element (Kohler units only) and wash in warm water with detergent. Rinse until all traces of detergent are eliminated and squeeze out excess water ***(DO NOT wring).*** Air dry. Saturate with engine oil and squeeze out excess oil.

d) Check paper element. ***Gently*** tap the flat side of the paper element to dislodge any dirt. ***DO NOT*** wash or use pressurized air to clean paper element. Replace if dirty, bent or damaged.

e) Reinstall foam pre-cleaner to paper element (Kohler units only), then reinstall paper element and cover.

For Kawasaki Liquid-cooled and Kohler 26 HP EFI units with canister type, 2 stage cleaner: ***Service Interval: 50 hrs.***
More often under severe conditions.

a) Stop engine and remove key.

b) Kawasaki Liquid-cooled only: Tilt seat up and tilt hood forward to gain access to the air cleaner.

c) Loosen retaining clips and remove air cleaner compartment cover.

d) Check paper element. ***Gently*** tap the paper element to dislodge any dirt. ***DO NOT*** wash or use pressurized air to clean paper element. Replace if dirty, bent or damaged.

e) Reinstall paper element. Position the cover so that the rubber dust ejector is pointing downward and secure with retaining clips.

5.1.10 Check Spark Arrester

For Kawasaki Liquid-cooled 22,23,&27 hp; Kohler 26 hp EFI; Kawasaki Air-cooled 23 hp engines:

⚠ **WARNING**
POTENTIAL HAZARD ♦ Hot exhaust system components may ignite gasoline vapors even after the engine is stopped. ♦ Hot particles exhausted during engine operation may ignite flammable materials.
WHAT CAN HAPPEN ♦ Fire may result in personal injury or property damage.
HOW TO AVOID THE HAZARD ♦ Do NOT refuel or run engine unless spark arrester is installed.

Service Interval: 50 hours

1. Shut off engine, remove key, and wait for all moving parts to stop.
2. Wait for muffler to cool.
3. If any breaks in the screen or welds are observed, replace arrester.
4. If plugging of the screen is observed, remove arrester and shake loose particles out of the arrestor and clean screen with a wire brush (soak in solvent if necessary). Re-install arrester on exhaust outlet.

5.1.11 Change engine oil:

Service Interval: 100 hrs.

NOTE: Change oil and filter after first five (5) hrs. of operation.

a) Stop engine and remove key.

b) For Kawasaki Liquid-Cooled units – tilt seat up and tilt hood forward to gain access to the engine area.

c) Drain oil while engine is warm from operation.

d) Remove the oil drain plug. For Kohler air-cooled units, the oil drain plug is located at the right under-side of the engine. For the 22 & 23 HP Kawasaki liquid-cooled units, the oil drain plug is located at the front left corner of the engine. Allow oil to drain then replace drain plug. The 27 HP liquid-cooled and the 23 HP air-cooled Kawasaki units have an oil drain valve on the left side of engine. Open valve by rotating counterclockwise to drain oil. Allow oil to drain then tighten valve by rotating clockwise.

e) Replace the oil filter ***every other*** oil change. Clean around oil filter and unscrew filter to remove. Before reinstalling new filter, apply a thin coating of oil on the surface of the rubber seal. Turn filter clockwise until rubber seal contacts the filter adapter then tighten filter an additional 2/3 to 3/4 turn.

f) Clean around oil fill cap and remove cap. Fill to specified capacity and replace cap. Use oil recommended in engine owner's manual. ***DO NOT*** overfill.

g) Start the engine and check for leaks.

5.1.12 Change engine coolant: (Kawasaki Liquid-Cooled Units only)

Service Interval: 2 years/500 hours* – standard coolant
4 years/4000 hours* – Dex-Cool© extended life coolant (orange color)

** It is recommended to service at whichever interval happens first.*

a) Stop engine and remove key. Machine must be positioned on level surface.

b) Tilt seat up and tilt hood forward to gain access to the cooling area.

⚠ **WARNING**
POTENTIAL HAZARD ♦ Engine coolant is hot and pressurized. ♦ Radiator and surrounding parts are hot.
WHAT CAN HAPPEN ♦ Spray or steam from hot, pressurized liquid in the engine cooling system and touching a hot radiator may cause severe burns.
HOW TO AVOID THE HAZARD ♦ Allow the engine to cool completely before removing the radiator cap or servicing any component of the cooling system.

⚠ CAUTION
POTENTIAL HAZARD ♦ Engine coolant is toxic.
WHAT CAN HAPPEN ♦ Swallowing coolant can cause poisoning.
HOW TO AVOID THE HAZARD ♦ Do not swallow ♦ Keep out of reach of children and pets.

Drain coolant when engine is cool. Coolant may be drained from the radiator by loosening the drain cock in the right rear corner. The engine block may be drained by removing the rear radiator hose and/or by removing the drain plugs from the engine block.

For 23 HP Kawasaki Liquid-Cooled units: The plugs may be accessed from the back of the engine and are located in either cylinder wall adjacent to the main engine block. The plugs may be identified as hex head bolts with a black finish. See Figure 8.

For 27 HP Kawasaki Liquid-Cooled units: The plug may be accessed from the bottom left hand side of the engine. The plug may be identified as a hex head bolt with a black finish. See Figure 8.

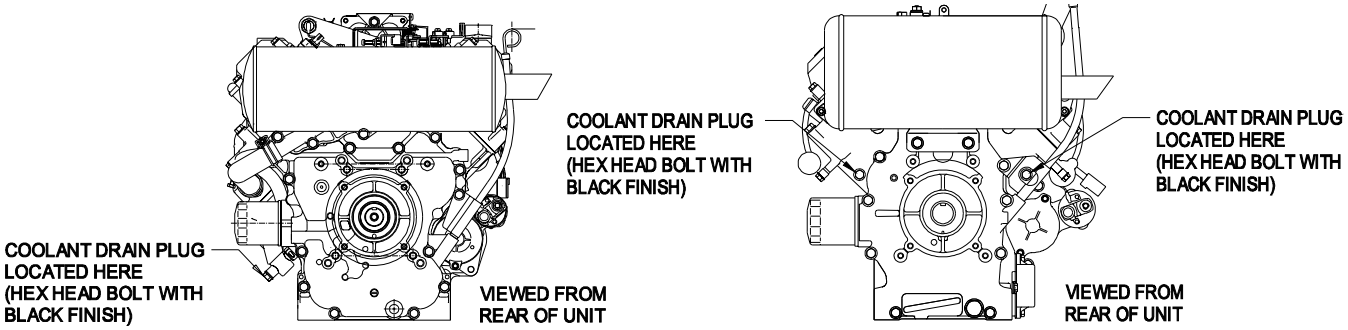

27 HP KAWASAKI **23 HP KAWASAKI**

FIG. 8
COOLANT PLUG LOCATION

a) Re-install all drain plugs and hoses and tighten drain cock.

b) Fill radiator with a 50/50 mix of water and engine coolant (as specified in Section 2.5.2), allowing some room (approximately 1/2”) for expansion. Add 50/50 coolant mix to overflow bottle on the left side of the engine as required to bring the level up to the indicator line on the bottle.

⚠ WARNING
POTENTIAL HAZARD ♦ Engine compartment contains open belt drives and fans. ♦ Rotating components can cause injury
WHAT CAN HAPPEN ♦ Fingers, hands, loose clothing or jewelry can get caught by the rotating fan and drive shaft.
HOW TO AVOID THE HAZARD ♦ Do not operate machine without the covers in place. ♦ Keep fingers, hands, and clothing clear of rotating components. ♦ Shut off engine and remove the ignition key before performing maintenance.

e) With the cap off the radiator, tilt hood closed and put the seat down. Start the engine. Refer to Section 4.3.2. Return the seat up and hood forward to the open position.

f) Operate engine until the engine thermostat opens and coolant is circulating through the radiator core. As air is purged from the engine block and the coolant level drops, add additional coolant to the radiator.

g) When the radiator is completely full and no additional coolant can be added, continue running the engine and install the radiator cap. Make sure that the cap is completely seated by pressing down firmly while turning until the cap stops. Once the cap is installed, the engine may be stopped.

5.1.13 Check hydraulic oil level:

***Service Interval:* 40 hr.**

a) Stop engine.

b) Tilt seat up.

c) Clean area around hydraulic reservoir cap and remove cap. Oil level should be to the top of the baffle inside the tank. If not, add oil. **Use only Mobil 1 15W-50 synthetic motor oil.**

⚠ WARNING
POTENTIAL HAZARD ♦ Hydraulic fluid escaping under pressure can penetrate skin and cause injury.
WHAT CAN HAPPEN ♦ Fluid accidentally injected into the skin must be surgically removed within a few hours by a doctor familiar with this form of injury or gangrene may result.
HOW TO AVOID THE HAZARD ♦ Make sure all hydraulic fluid hoses and lines are in good condition an all hydraulic connections and fittings are tight before applying pressure to hydraulic system. ♦ Keep body and hands away from pinhole leaks or nozzles that eject high pressure hydraulic fluid. ♦ Use cardboard or paper to find hydraulic leaks. ♦ Safely relieve all pressure in the hydraulic system before performing any work on the hydraulic system.

5.1.14 Check tire pressures:

Service Interval: 40 hrs.

a) Stop engine and remove key.

b) Inflate all four tires to 13 psi (90 kPa).

NOTE: Do not add any type of tire liner or foam fill material to the tires. Excessive loads created by foam filled tires may cause failures to the hydro drive system, frame and other components. Foam filling tires will void the warranty.

5.1.15 Check condition of belts:

Service Interval: 40 hrs.

a) Stop engine and remove key.

b) Tilt seat up. Lift the rubber flap on front side of the engine to check pump drive belt.

c) Remove left and right belt shields on deck and lift up floor pan to inspect deck drive belt.

d) Check under machine to inspect the mule drive belt.

e) Check alternator drive belt behind engine (Kawasaki Liquid-cooled units only)

f) See Sections 5.2.3, through 5.2.6 for belt adjustment.

5.1.16 Lubricate grease fittings:

Service Interval: Refer to chart.

a) Stop engine and remove key.

b) Lubricate fittings with one to two pumps of NGLI grade #2 multi-purpose gun grease.
Refer to the following chart for fitting locations and lubrication schedule.

LUBRICATION CHART

FITTING LOCATIONS	INITIAL PUMPS	NO. of PLACES	SERVICE INTERVAL
1. Front Caster wheel hubs w/zerk (Serial Nos. 237,574 & lower)	∗2	2	∗40 hours
Front Caster wheel hubs w/o zerk (Serial Nos. 237,575 & higher)	∗0	2	∗yearly
2. Front Caster Pivots	∗0	2	∗yearly
3. Height Adj. Shaft Bearings	1	5	40 hours
4. Deck Drive Belt Idler Arm	1	1	40 hours
5. Brake Brackets	1	2	200 hours
6. Mule Drive Belt Idler Arm	1	1	40 hours
7. Pump Drive Belt Idler Arm	1	1	40 hours
8. Deck Rear Struts	1	2	40 hours

∗ See Section 5.1.16 c) for special lubrication instructions on the front caster pivots and Section 5.1.17 for special lubrication instructions on the front casters wheel hubs.

No. 6 (Mule Drive Belt Idler Arm)
Located Under Engine Frame

No. 7 (Pump Drive Belt Idler Arm)
Located Under Engine Frame

No. 4,6, & 7 (Idler Pivots) Monthly disassemble belt and spring and grease under a “No Load” condition.

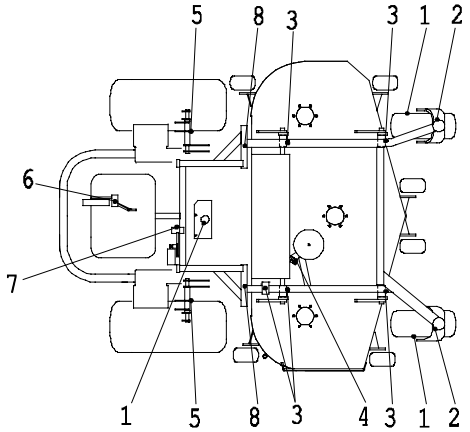

c) Lubricate front caster pivots once a year. Remove hex plug and cap. Thread grease zerk in hole and pump with grease until it oozes out around top bearing. Remove grease zerk and thread plug back in. Place cap back on.

5.1.17 Lubricate caster wheel hubs:

Service Interval: 40 hours for units with grease zerks.
Once Yearly for units without grease zerks.

a) Identify which type of caster wheel is installed on the unit. If there is a grease zerk on the caster wheel hub (Serial Nos. 237,574 and lower), lubricate fittings with one to two pumps of NGLI grade #2 multi-purpose gun grease. If there is no grease zerk (Serial Nos. 237,575 and higher), follow the instructions in steps b) through i).

b) Stop engine and remove key.

c) Disassemble the caster wheels, pry out seals, and inspect bearings for wear or damage and replace if necessary.

d) Pack the bearings with a NGLI grade #2 multi-purpose gun grease.

e) Insert (1) bearing, (1) new seal, and (1) bearing spacer .

NOTE: Seals (Exmark PN 103-0063) must be replaced.

f) Insert Caster Spacer.

g) With open end of wheel up, fill area inside wheel around caster spacer with NGLI grade #2 multi-purpose gun grease.

h) Insert the second (1) bearing, (1) new seal, and (1) bearing spacer.

i) Put wheel and tire assembly on the unit and adjust by tightening the nyloc nut until wheel will not turn freely. Back nut off 1/6 of a turn so the wheel will just turn with a slight amount of drag.

IMPORTANT: To prevent seal and bearing damage, check the bearing adjustment often. Spin the caster tire. The tire should not spin freely (more than 1 or 2 revolutions) or have any side play. If the wheel spins freely adjust per step i).

5.1.18 Lubricate seat switch actuator: (All units except for Kohler 26 HP EFI)

Service Interval: 160 hrs.

a) Stop engine and remove key.

b) Tilt seat up.

c) Lubricate switch actuator rod with spray type lubricant or light oil.

5.1.19 Lubricate brake handle pivot:

Service Interval: 160 hrs.

a) Stop engine and remove key.

b) Lubricate bronze bushings on brake handle pivot with a spray type lubricant or light oil.

5.1.20 Lubricate brake rod bushings:

Service Interval: 160 hrs.

a) Stop engine and remove key.

b) Tilt seat up.

c) Lubricate bronze bushings on each end of brake rod shaft with a spray type lubricant or a light oil (bushings are located to the inside of the flange bearings).

5.1.21 Lubricate motion control bronze bushings:

Service Interval: 160 hrs.

a) Stop engine and remove key.

b) Tilt seat up.

c) Lubricate bronze bushings on flange bearings securing the motion control arm shafts with a light oil or a spray type lubricant.

5.1.22 Remove engine shrouds and clean cooling fins (Kohler Air-cooled units only):

Service Interval: 80 hrs.

a) Stop engine and remove key.

b) Remove cooling shrouds from engine and clean cooling fins. Also clean dust, dirt and oil from external surfaces of engine, which can cause improper cooling.

c) Make sure cooling shrouds are reinstalled. Operating the engine without cooling shrouds will cause engine damage due to overheating.

5.1.23 Check spark plugs:

Service Interval: 160 hrs.

a) Remove spark plugs, check condition and reset gaps, or replace with new plugs. See Engine Owners Manual.

5.1.24 Change fuel filter:

Service Interval: As Required

a) A fuel filter is installed between the fuel tanks and the engine. Replace when necessary.

For Kohler 26 HP EFI Units:

⚠ **WARNING**
POTENTIAL HAZARD ♦ Fuel system components are under high pressure.
WHAT CAN HAPPEN ♦ The use of improper components can result in system failure, gasoline leakage and possible explosion.
HOW TO AVOID THE HAZARD ♦ Use only approved fuel lines and fuel filters for high pressure systems.

Note: For Kohler 26 HP EFI units use only high pressure clamps and SAE R7 or R9 hose available from Exmark or Kohler. Clamps require special pliers P/N 1-643394 (Oetiker P/N 14100118 or Kohler P/N 2445505) for installation.

Replacement Filters	
Kohler 26 HP EFI	**Exmark** P/N 99-9403 (low pressure)
	Kohler P/N 2405003 (high pressure)
Kohler Air-cooled (except 26 HP EFI)	**Kohler** P/N 2405002
Kawasaki Liquid-cooled	**Kawasaki** P/N 49019-1055
Kawasaki Air-cooled	**Kawasaki** P/N 49019-7001

Note: When replacing the fuel filter for the Kohler 26 HP EFI units, wet the interior of the new filter with gasoline before installation to prevent the high pressure pump from tearing the filter.

5.1.25 Fuel pressure relief and priming procedure: (26 HP Kohler EFI units only)

Service Interval: As required

⚠ WARNING
POTENTIAL HAZARD ♦ Fuel system components remain under high pressure, even when the engine is stopped.
WHAT CAN HAPPEN ♦ Failure to relieve pressure from the system can cause gasoline to spray or spill. Spilled fuel or fuel vapors could be ignited by hot parts.
HOW TO AVOID THE HAZARD ♦ Allow the engine to cool completely. ♦ Safely relieve the pressure from the fuel system before attempting to service the fuel system.

A Kohler pressure gauge with an integral relief valve (Kohler Part No. 2445504) is recommended for relieving pressure and purging air in the fuel system.

To relieve the system of pressure:

a) Stop engine and remove key.
b) Allow the engine to cool completely.
c) Connect the black tester hose from the Kohler pressure gauge to the test valve in the fuel rail.
d) Route the clear hose into a portable gasoline container and depress the button on the tester relief valve.

IMPORTANT: The fuel system for Kohler 26 HP EFI units must be purged of all air prior to start up if the engine has been allowed to run out of gas or the system has been disassembled.

To purge the air out of the fuel system:

a) Connect the black hose to the test valve in the fuel rail and route the clear tube into a portable gasoline container.

b) Depress and hold the release button and crank the engine in 10-15 second intervals, allowing a 60 second cool-down period between intervals, until air is purged and fuel is visible in the discharge tube.

NOTE: If you do not have the pressure gauge, you can crank the engine in 10-15 second intervals, allowing a 60 second cool-down period between cranking intervals, until the engine starts.

5.1.26 Change hydraulic system filter:

Service Interval: After First 250 hrs.
Then yearly thereafter

NOTE: Use only Exmark Part No. 1-513211 for summer use above 32° F or Part No. 1-523541 for winter use below 32° F.

a) Stop engine and remove key.

b) Raise seat.

c) Carefully clean area around filter. It is ***important*** that ***no dirt*** or ***contamination*** enter hydraulic system.

d) Unscrew filter to remove and allow oil to drain from reservoir.

IMPORTANT: Before reinstalling new filter, fill it with Mobil 1 15W-50 and apply a thin coat of oil on the surface of the rubber seal.

Turn filter clockwise until rubber seal contacts the filter adapter, then tighten the filter an additional 2/3 to 3/4 turn.

e) Fill reservoir as stated in Section 5.1.13.

f) Raise the rear of machine up and support with jack stands (or equivalent support) just high enough to allow drive wheels to turn freely.

g) Start engine and move throttle control ahead to full throttle position. Move the speed control levers to the full speed and run for several minutes. Shut down machine and recheck oil level.

Do not change hydraulic system oil (except for what can be drained when changing filter), unless it is felt the oil has been contaminated or been extremely hot.

Changing oil unnecessarily could ***damage*** hydraulic system by introducing contaminates into the system.

5.1.27 Inspect electric clutch gap:

Service Interval: 250 hrs.

Refer to Section 5.2.12 for inspection and adjustment procedures.

5.1.28 Wheel hub - slotted nut torque specification.

Service Interval: 500 hrs

When tightening the slotted nut on the wheel motor tapered shaft:

a) Torque the slotted nut to 125 ft. lbs.

b) Check distance from bottom of slot in nut to inside edge of hole. Two threads (0.1”) or less should be showing.

c) If more than two threads (0.1”) are showing remove nut and install washer (PN 1-523157) between hub and nut.

d) Torque the slotted nut to 125 ft. lbs.

e) Then tighten nut until the next set of slots line up with the cross hole in shaft.

f) Replace cotter pin.

5.1.29 Fuel Tank – mounting hardware specification.

When installing the nuts on the fuel tank studs, fully tighten the nyloc nut and back off 1/2 turn. This allows for normal fuel tank expansion and contraction with changes in temperature and fuel levels.

5.1.30 Thread locking adhesives such as “Loctite 242” or “Fel-Pro, Pro-Lock Nut Type” are used on the following fasteners:

a) Pump drive sheave set screws.

b) Square head setscrews on Hydro pump control arms.

c) Sheave retaining bolt in the end of engine crankshaft.

d) Setscrews on the Jackshaft sheaves.

NOTE: Newer models with a Jackshaft assembly, which can be identified by a cast housing, do not have setscrews on the Jackshaft and Sheaves.

Adhesives such as “Loctite RC/609 or RC/680” or “Fel-Pro Pro-Lock Retaining I or Retaining II” are used on the following:

a) Fuel tank studs, where studs are inserted into tank.

5.1.31 An anti-seize compound is used on the following locations:

a) Between Jackshaft and sheaves.

b) Between Jackshaft and bearing on newer models with a cast Jackshaft housing.

c) Between sheaves and cutter housing spindles.

d) Between the bearings and the cutter housing spindles.

5.1.32 Dielectric grease is used on all blade type electrical connections to prevent corrosion and loss of contact.

5.2 ADJUSTMENTS

IMPORTANT: Disengage blade clutch, shut off engine and remove key before servicing, cleaning or making any adjustments to the unit.

5.2.1 Cutting Height Adjustment.

a) Stop machine and move drive levers out to neutral lock position.

b) Disengage blades.

c) Raise the deck lever to the transport position (also the 5” cutting height position). See Fig 9.

For Kohler 26 HP EFI units and all 72” units the deck can be raised by pulling the deck lever up and/or by pushing on the deck lift assist lever.

NOTE: When changing cutting height positions, always come to a complete stop and disengage the mower blades.

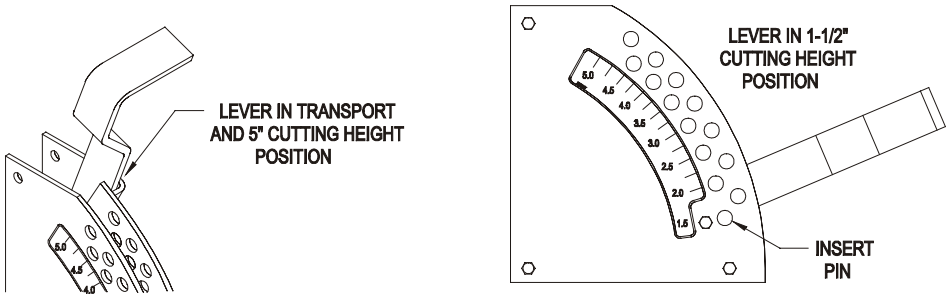

FIG. 9
CUTTING HEIGHT POSITION

d) Insert height adjustment pin into hole corresponding to desired cutting height and install hairpin cotter. See decals on the sides of deck lift plate.

e) Move lever out of transport (or 5” cutting height) position and down onto height adjustment pin to mow at selected height.

f) To transport, move lever back up to transport (or 5” cutting height) position.

Note: The foot operated deck lift assist lever (standard on 72” units the Kohler 26 HP EFI units and optional on all other models) can be used to momentarily lift the deck to clear objects. Be sure that blades are disengaged.

g) Adjust anti-scalp rollers for Normal Operating Conditions. Stop engine and remove key. Place rollers in one of the positions shown in Fig. 10. Rollers will maintain 3/4 in. (19 mm) clearance to the ground to minimize gouging and roller wear or damage. **For Maximum Flotation,** place rollers one hole position lower. Rollers should maintain 1/4 in. (6.4 mm) minimum clearance to ground. ***Do Not*** adjust rollers to support the deck. Be sure *bolt is tightened properly* or loss of anti-scalp roller may result.

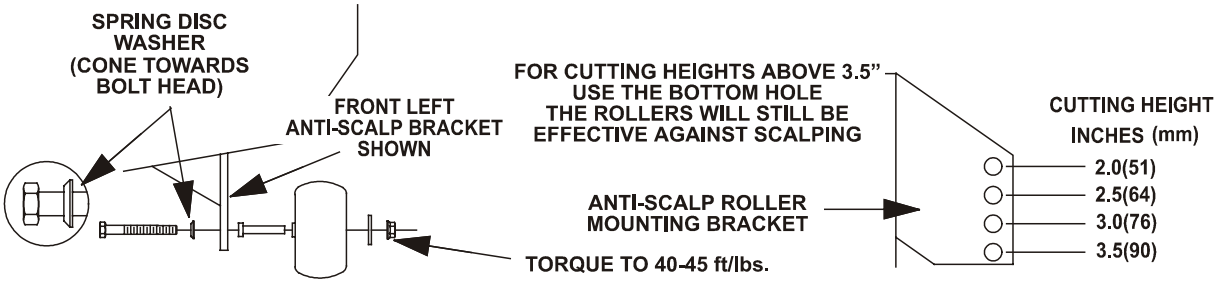

FIG. 10
ANTI-SCALP ROLLER ADJUSTMENT

5.2.2 Deck Leveling

a) Position mower on a flat surface.

b) Stop engine and remove key.

c) Check tire pressure of all four (4) tires. If needed, adjust to 13 psi (90 kPa).

d) Set anti-scalp rollers to top holes or remove them completely for this adjustment.

e) Raise the deck to the 5" height position (also transport position) and take all force off of the two large deck lift springs by loosening the nuts at the front of each spring. See Fig. 11.

f) **For 52" and 60" units** - Lower the deck to the 1-1/2" height position.

For 72" units – Lower the deck to the 1-1/2" height position. Force the left rear deck support arm downward about 1/4" to get the deck to rest at the 1-1/2" height position. Place locking pliers between the rear swivel and spring stop to hold the deck in this position. See Fig. 11.

g) Place a 3/4" thick block of wood under each of the two (2) rear anti- scalp roller brackets and place one under ***one of the front center*** anti-scalp roller brackets.

h) Loosen the four (4) top chain bolts in slots. Check the length of the rod swivel assemblies. The distance from the outside of the rear swivel to the outside of the front swivel should be *approximately* 20-1/4 inches (Kawasaki Liquid-cooled units (Serial Nos. 259,999 & Lower) with a 52" deck should measure approximately 20 inches). Adjust the length by turning nuts on either side of the front swivels.

NOTE: Adjust so that all four (4) swivels are free in their holes. This may cause the measurement to vary slightly from side to side.

i) Adjust the two (2) rear upper chain attachment bolts in the slots to take the slack out of the chains. (Deck is still supported by wood blocks under the caster roller brackets). Tighten hardware on the rear chains.

j) Adjust the two (2) front upper chain attachment bolts in the slots to take the slack out of the chains. (Deck is still supported by one wood block under one of the front roller brackets) If the bolts are all the way to the end of the slots, shorten or lengthen the rod/swivel assemblies as required, adjust each side the same amount.

k) Recheck that the 3/4” blocks fit just snugly under the brackets and that the tension on all the chains are approximately equal. Make sure all chain attachment bolts are tight. Reposition anti-scalp rollers and tighten securely.

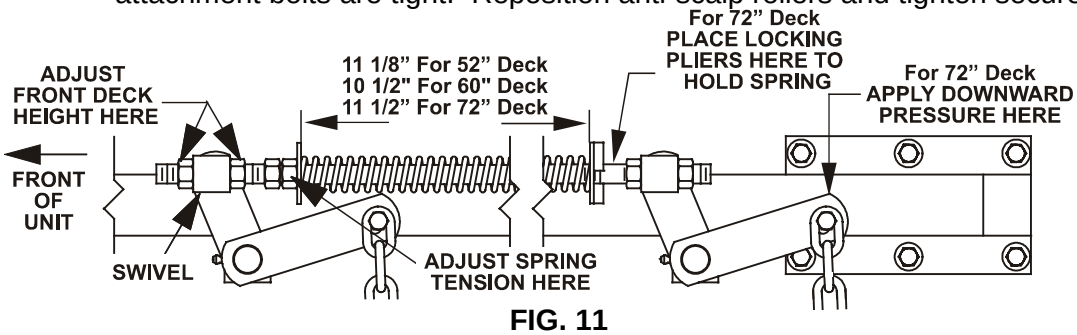

FIG. 11
SWIVEL ADJUSTMENT
SPRING COMPRESSION ADJUSTMENT

l) Raise deck lift lever to the 5” cutting height position See Fig 9. Adjust spring compression until proper distance is obtained between the two large washers (See Fig 11). Adjustment is made by turning the nut at the front of each spring (clockwise will shorten the spring, counter-clockwise will lengthen the spring). Lock in position with jam nuts.

NOTE: When above adjustments have been made, the front of the deck will be slightly lower than the rear of the deck.

5.2.3 Pump Drive Belt Tension.

Self-tensioning - No adjustment necessary.

5.2.4 Mule Drive Belt Tension Adjustment.

Self-tensioning idler, adjust as follows:

a) Stop engine and remove key.

b) Check to make sure the center of the bolt head in the center of the spring loaded pulley, on left side engine deck support, is positioned between the centers of the two alignment holes in the left support plate (See Fig 12). It is necessary to adjust the belt tension when the center of the bolt head is at or below the center of the bottom alignment hole.

c) When adjustment is necessary, loosen the idler pulley on the right-hand side so it can move up and down in the slot.

Place a wrench on the 3/8” nut in the center of the spring loaded pulley and apply upward pressure to relieve tension on the spring (a 1/2” drive breaker bar and 9/16 socket works best).

Reposition the adjusting pulley to the bottom of the slot.

NOTE: When installing a new belt, it is necessary to reposition the right adjusting pulley upward in the slot in order to position the center of the spring loaded pulley between the alignment holes.

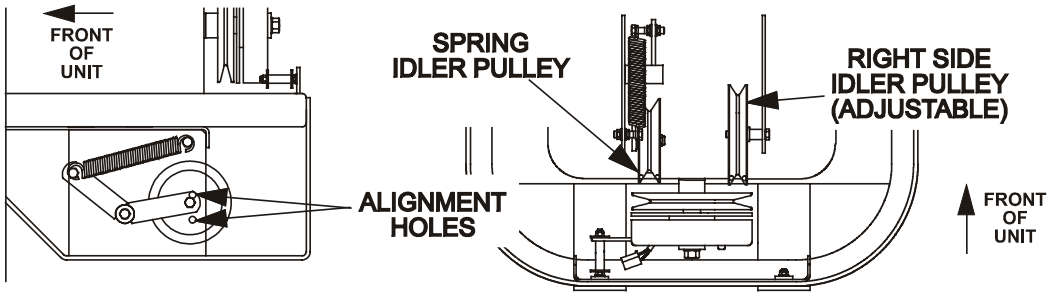

FIG. 12
MULE DRIVE BELT ADJUSTMENT

5.2.5 Deck Belt Tension.

a) The deck belt is tensioned by a self-tensioning idler, ***no adjustment is necessary***.

5.2.6 Alternator belt tension. (Kawasaki Liquid-cooled units only)

a) Stop engine and remove key.

b) To tighten alternator belt, loosen both upper and lower alternator mounting bolts. Rotate alternator out, away from engine and re-tighten hardware to secure in place.

c) When properly tensioned, the alternator belt will deflect 1/8" while applying 5-7 pounds of force to the belt midway between the sheaves.

5.2.7 Adjust Seat Switch (All units except Kohler 26 HP EFI)

a) If necessary, adjust the seat actuator rod length to where the machine will shut off when the operator raises off the seat (with ***brake disengaged or blade switch engaged***) but will continue to run with operator in seat (a slight shift in weight should not shut machine off). Normal adjustment is when length of spring is 2.09" (with seat up).

NOTE: To prevent rough ground cut-outs the unit is equipped with a time delayed seat switch. When the operator raises off the seat with either the brake disengaged or the cutting blades engaged, the engine should stop after 1/2 second has elapsed.

b) To adjust seat switch, loosen locknut on bottom of the actuator rod (5/16 x 7" bolt) and adjust the nuts to move the actuator plate up or down on the rod.

5.2.8 Belt Guide Adjustment.

a) Stop engine and remove key.

b) Remove the belt shield on the right side of mower deck.

c) For 52" & 62" units only - note belt guide bolted to deck near the shield support stud and right-hand pulley. Guide should be 1/8" away from the belt, with bolt-end of guide at end of slot (See Fig 13).

d) If adjustment is necessary, loosen the bolt securing the belt guide and make proper adjustment. Tighten hardware.

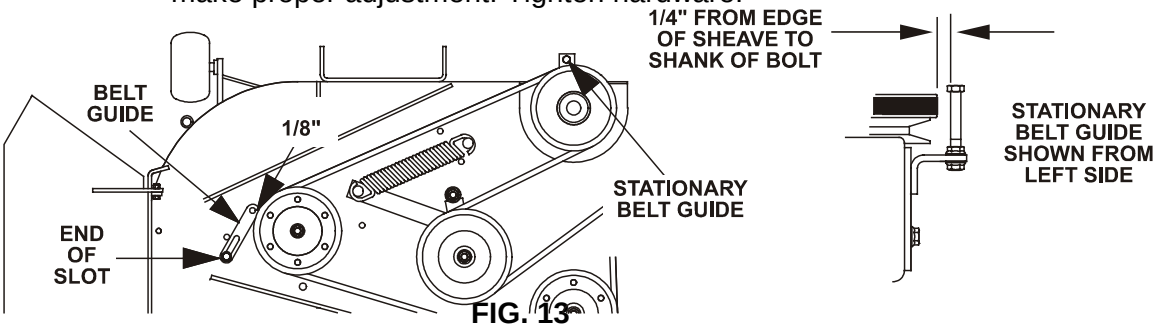

FIG. 13

BELT GUIDE POSITIONING

e) There is a stationary belt guide at the rear center of the deck. Adjust to where shank of bolt is 1/4" away from the edge of the sheave. Note: Bolt head is above belt.

5.2.9 Brake Link Adjustment.

Check to make sure brake is adjusted properly.

a) Disengage brake lever (lever down).

b) Measure the length of the spring. Measurement should be 2.75" between washers (see Fig 14).

c) If adjustment is necessary, tighten the nut directly below the yoke and loosen the bottom nut (bottom one of the two tightened together) below the spring. Turn the nut directly below the washer (top nut of the two tightened together) until the correct measurement is obtained. Tighten the two nuts together and repeat on opposite side of unit. Turn clockwise to shorten spring length and turn counter-clockwise to lengthen the spring.

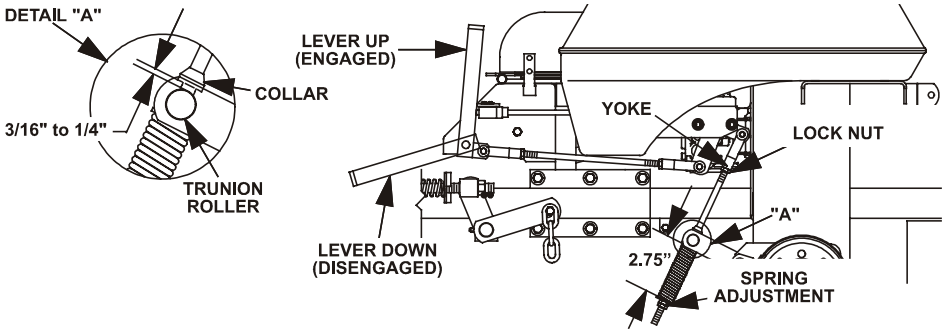

FIG. 14
BRAKE ADJUSTMENT

5.2.10 Brake Adjustment.

a) Check for brake link 2.75" measurement as described in section 5.2.9.

b) Engage brake lever (lever up).

c) Measure the distance between the trunion roller and the rod collar. Measurement should be 3/16" to 1/4" (See Fig 14).

d) If adjustment is necessary, loosen the nut directly below the yoke. Turn the bottom nut (below washer) until the correct measurement is obtained (See Fig 14) turn nut clockwise to lengthen the gap (screws rod into yoke) and turn counter-clockwise to shorten the gap (screws rod out of yoke). Tighten nut against yoke and check opposite side of unit, repeat if necessary.

5.2.11 Adjust Throttle Lever Tension.

a) Stop engine and remove key.

b) Tension in throttle lever can be adjusted by adjusting the tightness of the lever pivot bolt, which is located under the console (See Figure 15).

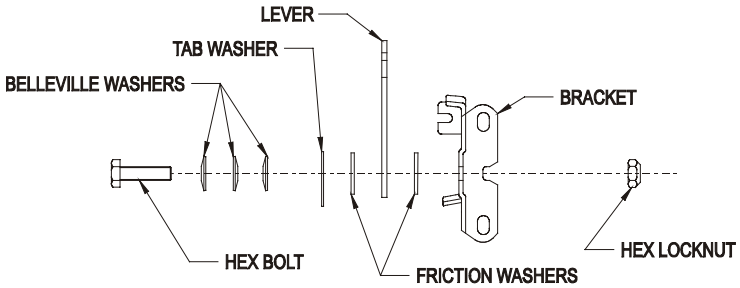

FIG. 15
THROTTLE TENSION

5.2.12 Electric Clutch Adjustment:

For Serial Nos. 260,000 and Higher:

Units have Warner clutches and no adjustment is necessary.

For Serial Nos. 259,999 and Lower:

Determine the brand of clutch installed on your unit. Ogura clutches can be identified by 3 bolts with springs. See Fig. 16. Warner clutches do not have these bolts.

No adjustment necessary for Warner clutches.

For Ogura clutches proceed with the following steps:

a) Stop engine and remove key.

b) Engage parking brake.

c) Place .012-.024 inch feeler gages through each of the three clutch gap holes. If gap exceeds this range, tighten the three adjusting nuts until the proper gap is obtained (See Fig.16). The three clutch gap holes are located at the “nut side” of the adjusting bolts. The adjusting bolts can be identified by the springs surrounding each bolt.

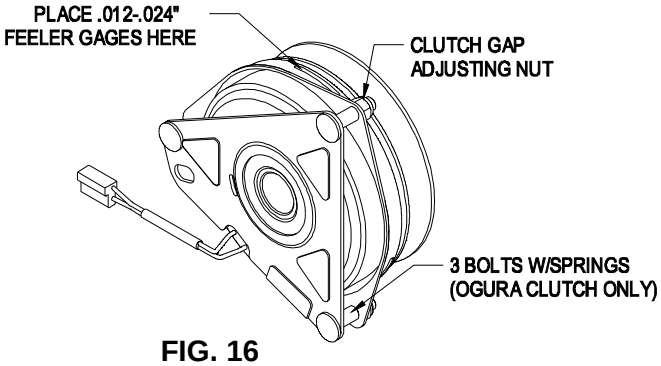

FIG. 16
CLUTCH GAP ADJUSTMENT

5.2.13 Reverse Indicator Adjustment:

a) Stop engine and remove ignition key.

b) Tilt seat forward.

c) Begin with either the left or right motion control lever. Move lever to the neutral position and pull lever back until the clevis pin (on arm below pivot shaft) contacts the end of the slot (just beginning to put pressure on spring), See Fig 17.

d) Check where lever is relative to notch in console (should be centered allowing lever to pivot outward to the neutral lock position).

e) If adjustment is needed, loosen the nut against the yoke and while applying slight rearward pressure on the motion control lever, turn the head of the adjustment bolt in the appropriate direction until lever is centered (keeping rearward pressure on the lever will keep the pin at the end of the slot and allow the adjustment bolt to move the lever to the appropriate position). Tighten lock nut.

f) Repeat on opposite side of unit.

5.2.14 Motion control linkage adjustment.

⚠ WARNING
POTENTIAL HAZARD ♦ Engine must be running and drive wheels must be turning so motion control adjustment can be performed.
WHAT CAN HAPPEN ♦ Contact with moving parts or hot surfaces may cause personal injury.
HOW TO AVOID THE HAZARD ♦ Keep fingers, hands, and clothing clear of rotating components and hot surfaces.

⚠ CAUTION
POTENTIAL HAZARD ♦ Raising the mower deck for service or maintenance relying solely on mechanical or hydraulic jacks could be dangerous.
WHAT CAN HAPPEN ♦ The mechanical or hydraulic jacks may not be enough support or may misfunction allowing the unit to fall, which could cause injury.
HOW TO AVOID THE HAZARD ♦ DO NOT rely solely on mechanical or hydraulic jacks for support. Use adequate jack stands or equivalent support.

a) This adjustment must be made with the drive wheels turning. First raise the frame and block up so that drive wheels can rotate freely.

b) Remove the electrical connection from the seat safety switch, located directly to the left of the seat switch assembly beside the hydraulic oil reservoir.

Temporarily install a jumper wire across the terminals in the connector of the wiring harness.

c) Run the unit at least 5 minutes with the drive levers at full forward speed to bring hydraulic system oil up to operating temperature.

d) Tilt seat forward.

e) Loosen locknuts from the ball joints on the two rods, which connect the motion control assemblies to the pump control arms (See Fig 17).

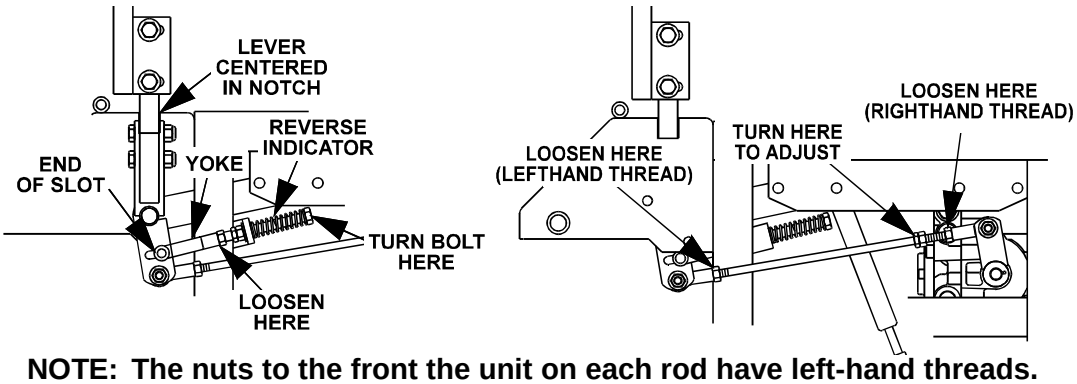

NOTE: The nuts to the front the unit on each rod have left-hand threads.

FIG. 17
MOTION CONTROL ADJUSTMENT

f) Start engine. ***Brake must be engaged and motion control levers out to start engine. Operator does not have to be in the seat because of the jumper wire being used.*** Run engine at full throttle and release brake.

g) The reverse indicator spring must be correct before the following adjustments can be made. See Section 5.2.13.

h) Begin on either the left or right side of unit and bring the motion control lever in to the neutral position. Adjust pump control rod length by rotating the double nuts on the rod in the appropriate direction until the wheels slightly creep in reverse. (See Fig. 17) Move the motion control lever to the reverse position and while applying slight pressure to the lever allow the reverse indicator spring to bring the levers back to neutral. The wheel must stop turning or slightly creep in reverse.

NOTE: The motion control lever needs to be in neutral while making any necessary adjustments.

The left rod assembly controls the left wheel and the right rod assembly controls the right wheel.

i) Repeat on opposite side of unit. Tighten locknuts against ball joints.

j) Shut off unit. Remove jumper wire from wire harness connector and plug connector into seat switch.

5.2.15 Caster pivot bearings pre-load adjustment.

a) Remove dust cap from caster and tighten nyloc nut until washers are flat and back off 1/4 of a turn to properly set the pre-load on the bearings. If necessary make sure the spring washers are reinstalled as shown in Figure 18.

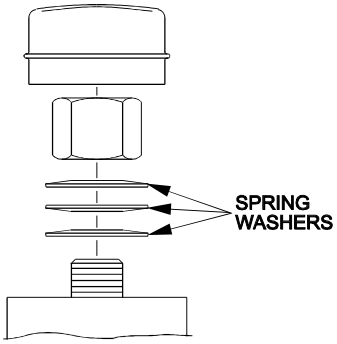

FIG. 18
CASTER ADJUSTMENT

5.2.16 Seat armrest adjustment.

a) ***Serial numbers 252,000 and above only (all models except EFI):*** Lift armrest on seat. Locate square tab marked with the numbers 1 through 4. Rotate square tab 1/4 turn to raise or lower the armrest in approximately 1/4" increments. See Fig. 19.

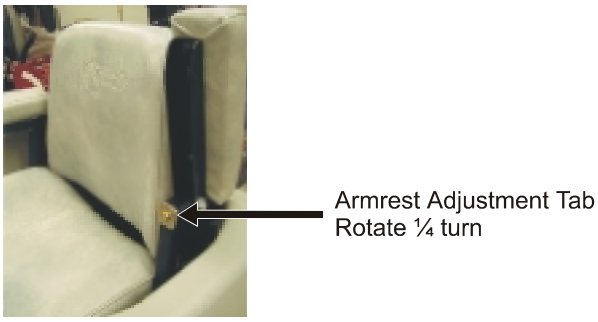

FIG. 19
ARMREST ADJUSTMENT

6. WASTE DISPOSAL

6.1 MOTOR OIL DISPOSAL

Engine oil and hydraulic oil are both pollutants to the environment. Dispose of used oil at a certified recycling center or according to your state and local regulations.

6.2 ENGINE COOLANT DISPOSAL

⚠ CAUTION
POTENTIAL HAZARD ♦ Engine coolant is toxic.
WHAT CAN HAPPEN ♦ Swallowing coolant can cause poisoning.
HOW TO AVOID THE HAZARD ♦ Do not swallow ♦ Keep out of reach of children and pets.

Both Dex-Cool© and the standard engine coolant are 50/50 mixtures of ethylene glycol (anti-freeze) and water. Ethylene glycol is a pollutant. Dispose of used engine coolant according to your state and local regulations.

6.3 MERCURY SWITCH DISPOSAL

⚠ CAUTION
POTENTIAL HAZARD ♦ The mercury contained in the tilt switch is poisonous.
WHAT CAN HAPPEN ♦ Exposure to mercury can cause severe illness.
HOW TO AVOID THE HAZARD ♦ Never attempt to open or repair the tilt switch ♦ Avoid contact with the mercury.

The tilt switch (PN 1-633782) on this unit contains mercury, a hazardous material. Mercury that is outside a sealed container vaporizes at room temperature. The vapors are harmful. Mercury can be absorbed through the skin. Do not attempt to open or repair this switch.

A very small amount of mercury is contained in a hermetically sealed body. The steel switch is then potted in a hard epoxy in a plastic case. It is unlikely that the mercury will ever escape from the enclosure. These high performance and reliable inexpensive switches are recyclable. Mercury is an important and beneficial compound but requires special care in handling and disposal. When used and managed properly, mercury is not a threat to people or the environment. This information is presented to users so that they are aware that these switches contain mercury and will apply sound disposal practices when these devices reach their normal end of life or are damaged.

Several states have passed laws concerning the disposal of devices containing mercury. In all the remaining states it is advisable to follow similar procedures. The laws state that these sealed devices contain mercury and should not be placed in the garbage until the mercury is removed and reused, recycled or otherwise managed to insure that it does not become part of solid waste or waters. Management and disposal practices must be within relevant federal, state or local laws.

Return the switch to your Exmark dealer if it is faulty and is being replaced or if the unit containing the switch is no longer operating and is being scrapped. If the switch is damaged or broken open use extreme caution in handling. Call your local waste management authority or Exmark Customer Service for instructions.

6.4 BATTERY DISPOSAL

⚠ DANGER
POTENTIAL HAZARD ♦ Battery electrolyte contains sulfuric acid, which is poisonous and can cause severe burns
WHAT CAN HAPPEN ♦ Swallowing electrolyte can be fatal or if it touches skin can cause severe burns.
HOW TO AVOID THE HAZARD ♦ Wear safety glasses to shield eyes, and rubber gloves to protect skin and clothing when handling electrolyte. ♦ Do not swallow electrolyte.

Federal law states that batteries should not be placed in the garbage. Management and disposal practices must be within relevant federal, state or local laws.

If a battery is being replaced or if the unit containing the battery is no longer operating and is being scrapped, take the battery to a local certified recycling center. If no local recycling is available return the battery to any certified battery reseller.

7. TROUBLE SHOOTING

7.1 MOWER PULLS LEFT OR RIGHT (W/LEVERS FULLY FORWARD).

a) It is common for a machine to pull slightly left or right with levers fully forward. Move levers forward and compensate as necessary.

b) Check air pressure in tires; 13 psi/drive, 13 psi/pneumatic castors.

c) Check reverse indicator and motion control linkage adjustment. See section 5.2.13 and 5.2.14.

7.2 MOWER CUTS UNEVENLY.

a) Check air pressure in tires; 13 psi/drive, 13 psi/pneumatic casters. A more uniform cutting height may be obtained with higher tire pressure on rough terrain.

A lower tire pressure provides more flotation. Higher pressures in front casters may cause them to shimmy on hard surfaces.

b) Check deck support chains.

c) Check deck leveling (See Adjustments Section 5.2.2.)

Note: The front of the mower deck will be approximately 1/4” lower than the back of the mower deck. This is the “rake” of the deck.

d) Check blades tip to tip for straightness (they should be within 3/16" or one blade width from being in line.)

7.3 ENGINE WILL NOT START.

a) Make sure the battery has a full charge. See section 5.1.3 for charging instructions.

b) *For all units except Kohler 26 HP EFI:* Be sure the throttle control is midway between the “SLOW” and “FAST” positions, and the choke is in the “ON” position for a cold engine or the “OFF” position for a warm engine.

c) Make sure there is fuel in the fuel tank and that the fuel valve is open.

d) Operator must be in the seat. Be sure the seat switch is properly adjusted. See Section 5.2.7.

e) Make sure the parking brake is set and motion control levers are moved out (neutral lock position).

f) Check that the blades are disengaged.

g) Check that the spark plug wires are properly connected.

h) Check for loose or faulty wiring connections.

i) Check for corrosion at all wiring connections. Even minor corrosion may cause a faulty connection. Clean connector terminals thoroughly with electrical contact cleaner, apply dielectric grease and reconnect.

NOTE: When disconnecting electrical connectors *DO NOT* pull on the wires to separate the connectors.

NOTE: After carefully checking the above steps, attempt to start the engine. If it does not start, contact your authorized Exmark service dealer.

IMPORTANT: It is essential that all operator safety mechanisms be connected and in proper operating condition prior to mower use.

When a problem occurs, do not overlook the simple causes. For example, starting problems could be caused by an empty fuel tank.

The following table lists some of the common causes of trouble. Do not attempt to service or replace major items or any items that call for special timing of adjustments procedures (such as valves, governor, etc.). Have this work done by your **Engine Service Dealer.**

ENGINE TROUBLESHOOTING TABLE

PROBLEM	NO FUEL	IMPROPER FUEL	DIRT IN FUEL LINE	DIRTY AIR FILTER	FAULTY SPARK PLUG	ENGINE OVERLOADED	BLOCKED FUEL FILTER	INCORRECT OIL LEVEL	DIRTY AIR SCREEN	INSUFFICIENT BATTERY CHARGE
Will not start	X		X	X	X	X	X			X
Hard starting	X	X	X	X	X	X	X			
Stops suddenly	X		X	X		X	X	X	X	
Lacks power		X	X	X	X	X	X	X	X	
Operates erratically		X	X	X	X	X	X		X	
Knocks or pings		X				X			X	
Skips or misfires		X	X	X	X				X	
Backfires			X	X	X	X			X	
Overheats*			X	X		X		X	X	
High fuel consumption				X	X	X			X	

* On Kawasaki Liquid Cooled units check for dirty radiator core.

7.4 ENGINE ERROR CODES – KOHLER 26 HP EFI UNITS ONLY

7.4.1 Electronic Control Unit Malfunction Indicator

The electronic control unit (ECU) continuously monitors operation of the EFI system. If a problem or fault within the system is detected, the malfunction indicator light (MIL) is illuminated. The MIL is the red light located on the control console between the key switch and the throttle controls. Follow the troubleshooting steps outlined in the Kohler engine operator's manual if the MIL is illuminated.

8. ELECTRICAL DIAGRAM – KOHLER 18, 22, 23, & 25 HP AIR-COOLED UNITS

Serial Nos. 251,999 and Lower

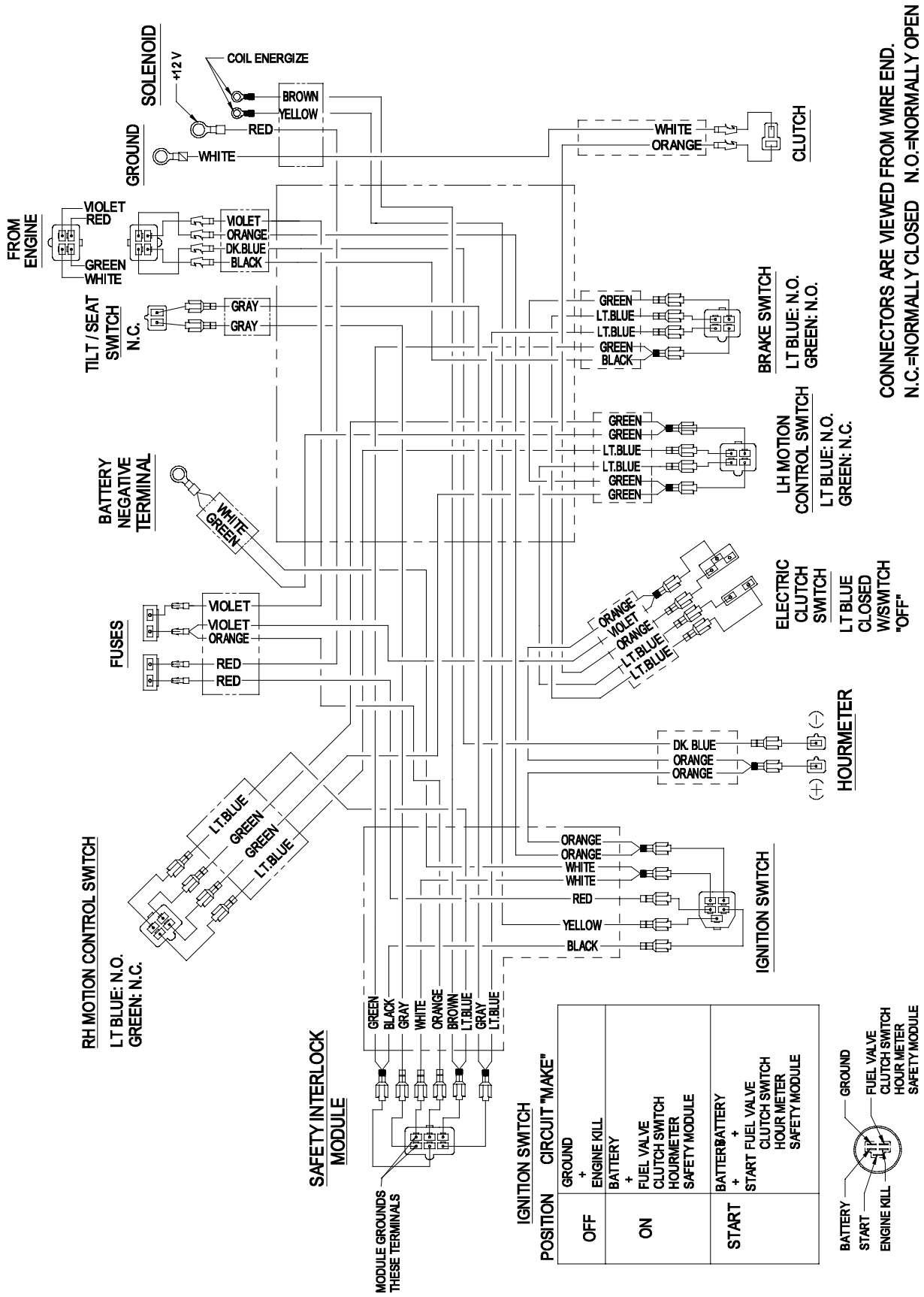

ELECTRICAL DIAGRAM – KOHLER 23 & 25 HP AIR-COOLED UNITS

Serial Nos. 252,000 and Higher

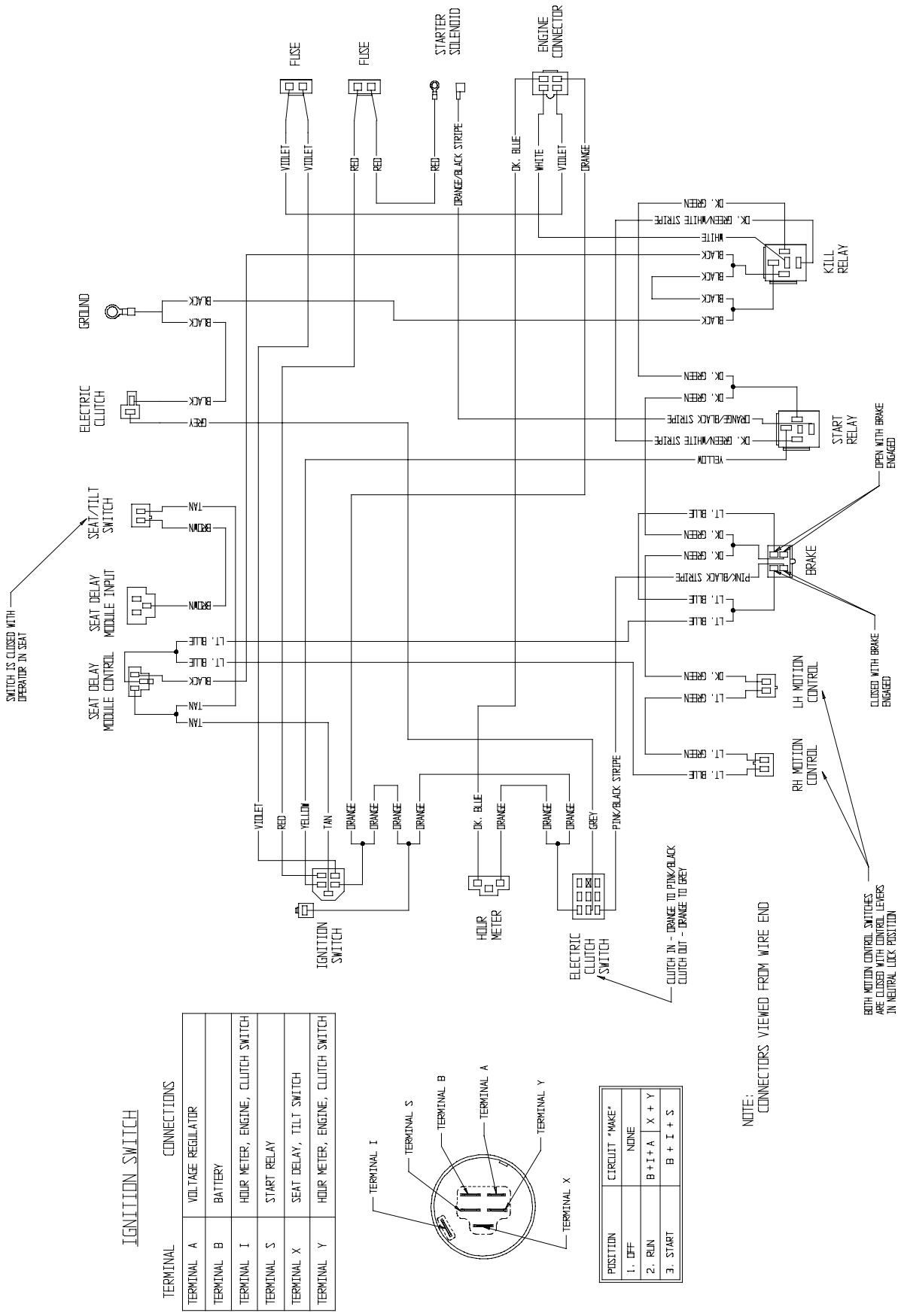

ELECTRICAL DIAGRAM – 22 & 23 HP KAWASAKI LIQUID-COOLED UNITS

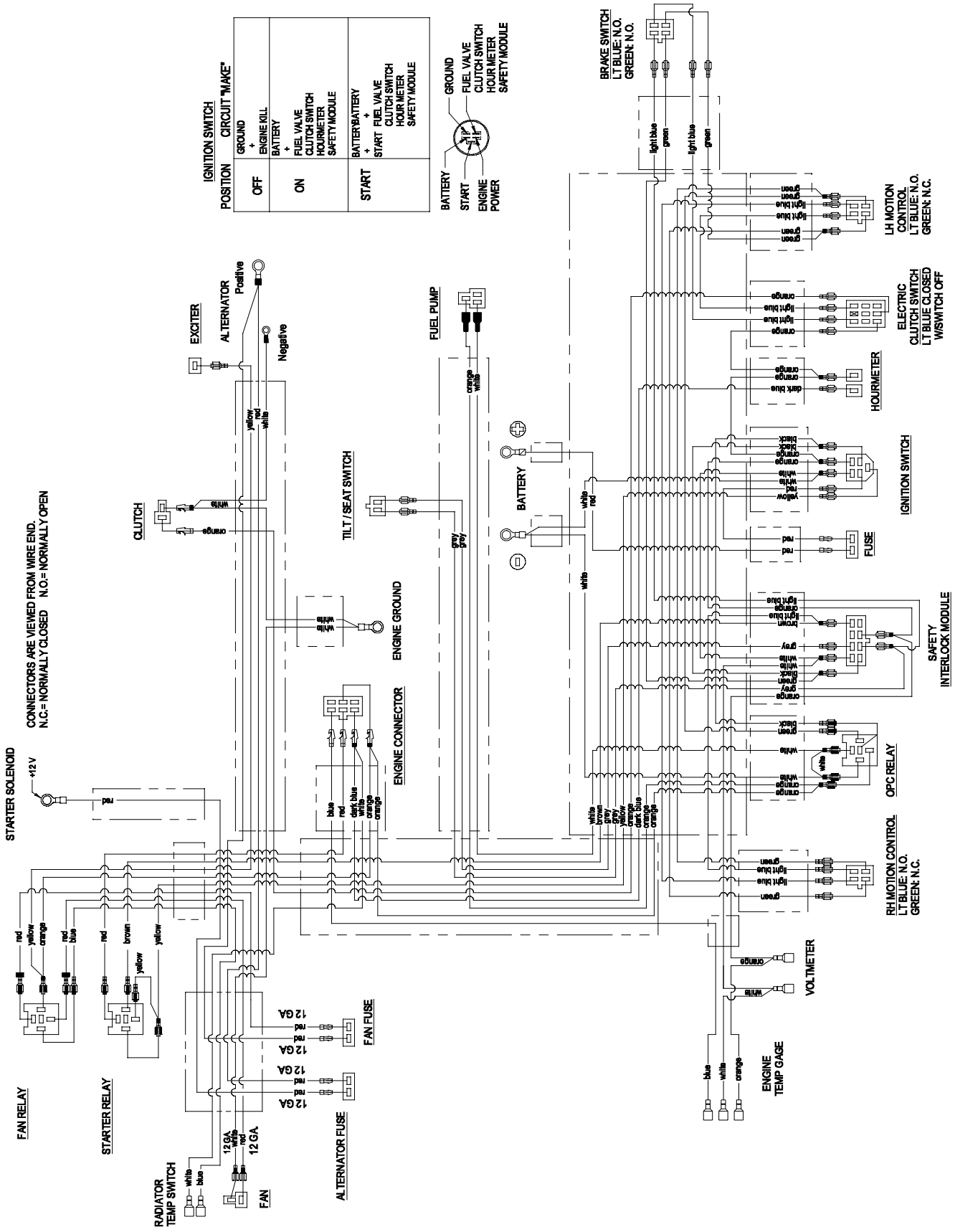

ELECTRICAL DIAGRAM – KOHLER 26 HP EFI UNITS

Serial Nos. 251,999 and Lower

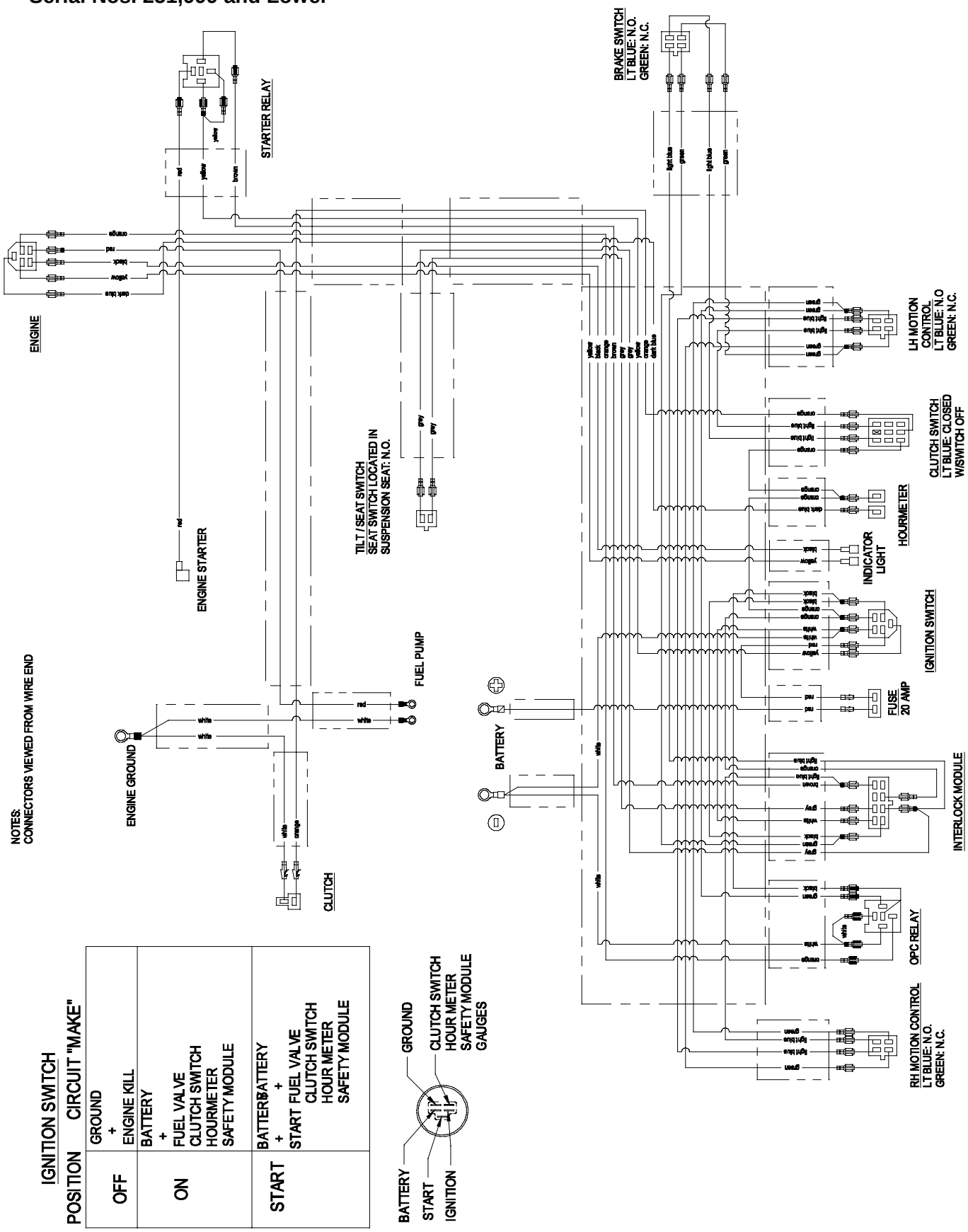

ELECTRICAL DIAGRAM – KOHLER 26 HP EFI UNITS

Serial Nos. 252,000 and Higher

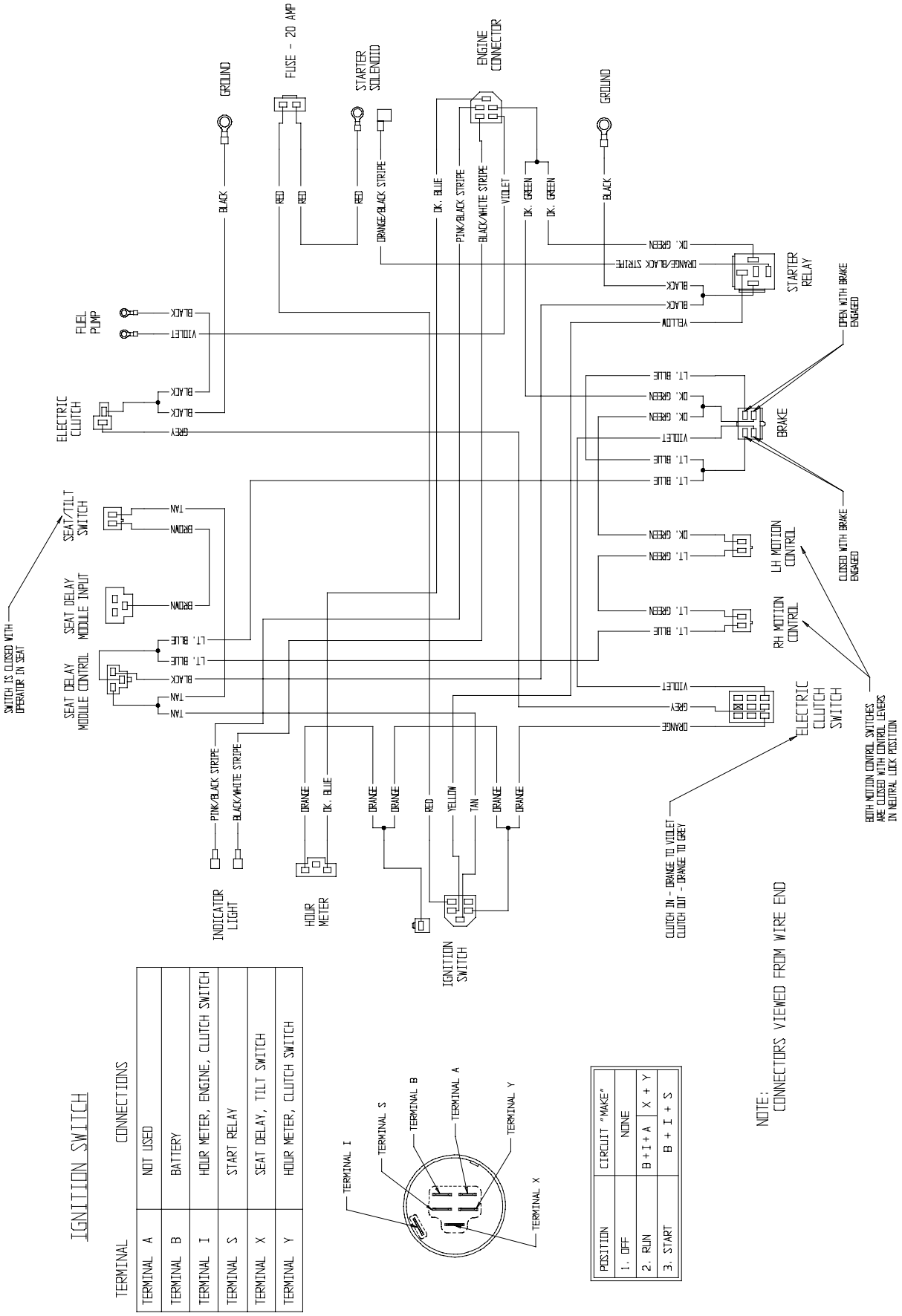

TERMINAL	CONNECTIONS
TERMINAL A	NOT USED
TERMINAL B	BATTERY
TERMINAL I	HOUR METER, ENGINE, CLUTCH SWITCH
TERMINAL S	START RELAY
TERMINAL X	SEAT DELAY, TILT SWITCH
TERMINAL Y	HOUR METER, CLUTCH SWITCH

POSITION	CIRCUIT "MAKE"	
1. OFF	NONE	
2. RUN	B + I + A	X + Y
3. START	B + I + S	

ELECTRICAL DIAGRAM – 23 HP KAWASAKI AIR COOLED

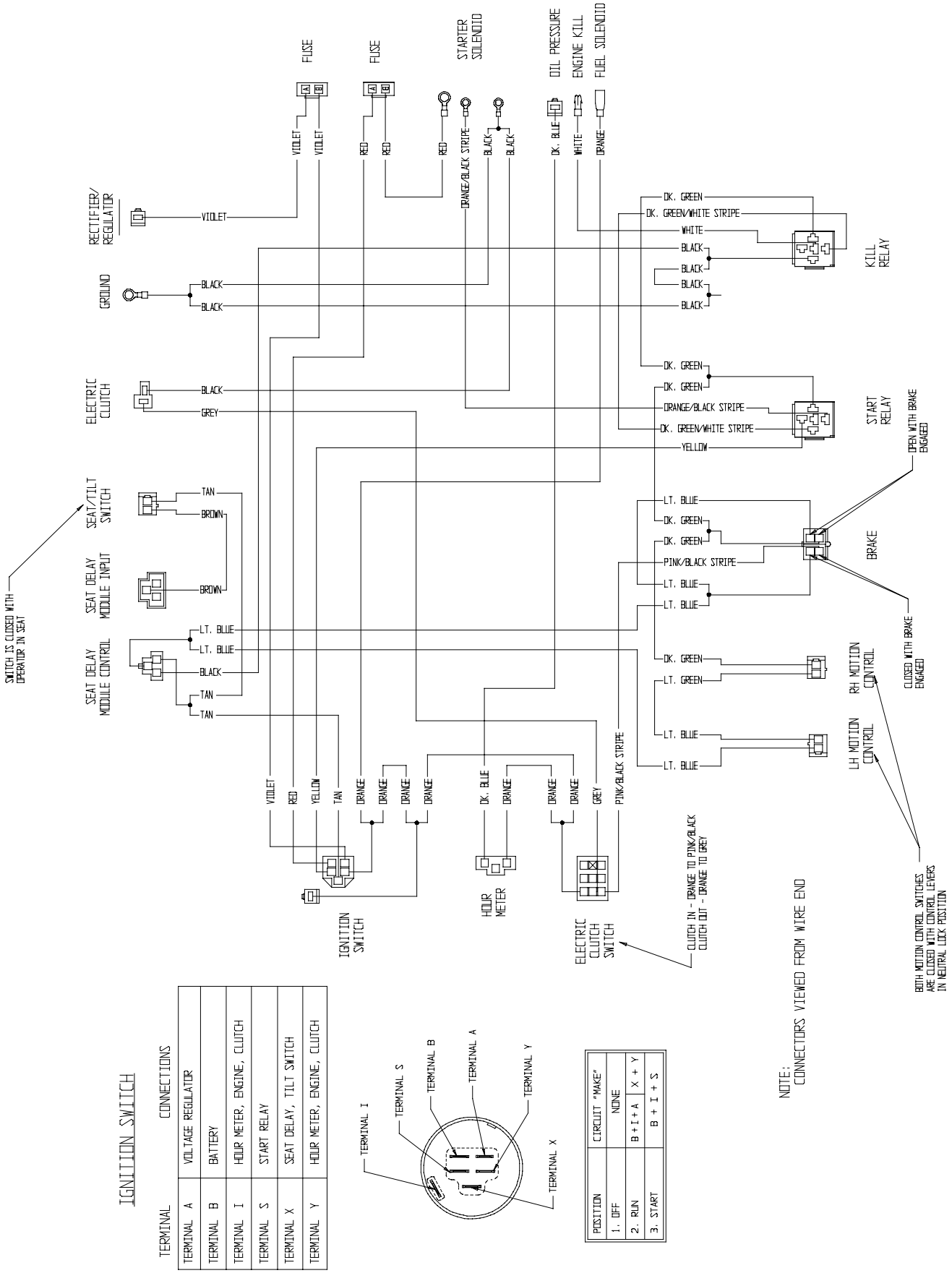

ELECTRICAL DIAGRAM – 27 HP KAWASAKI LIQUID COOLED

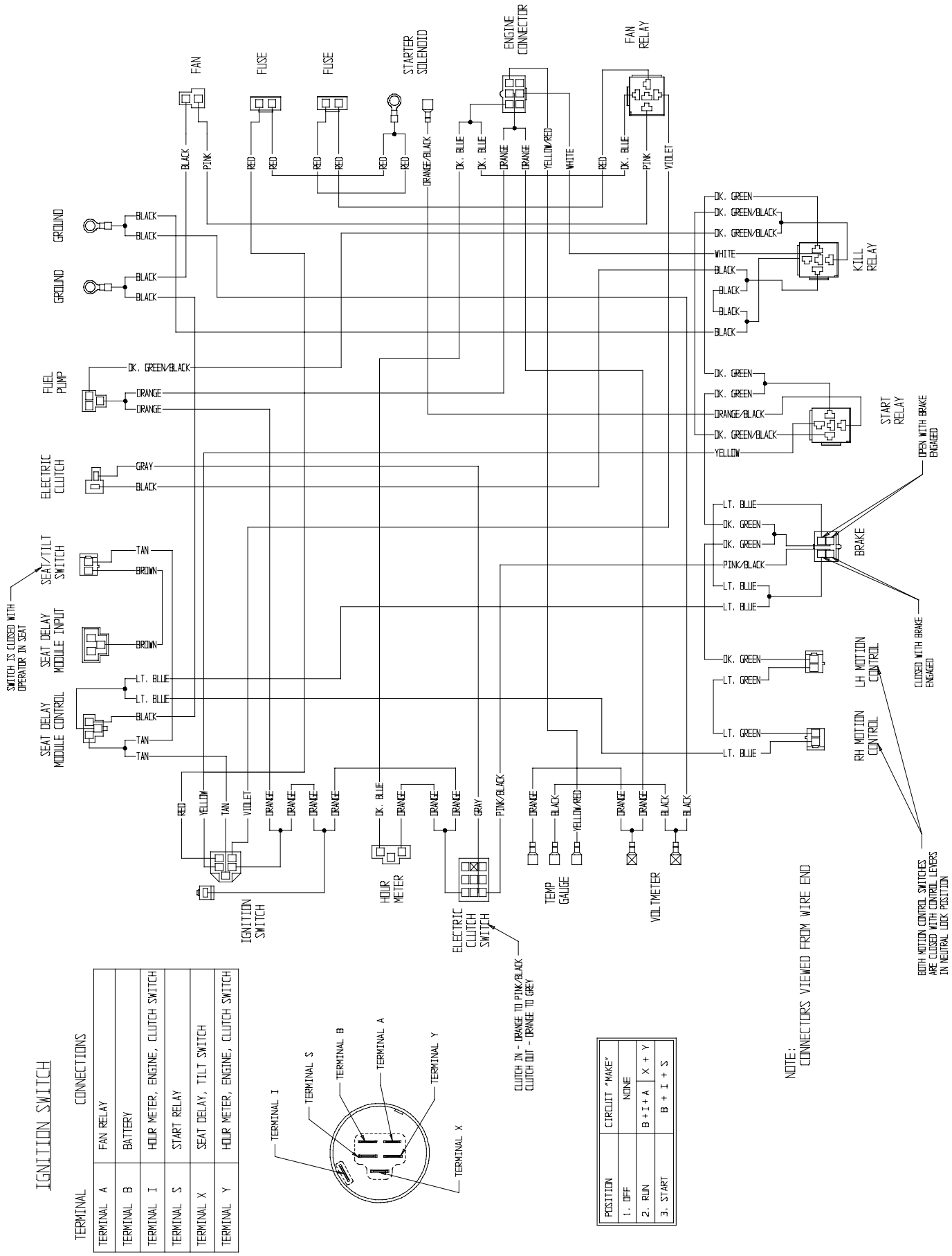

TERMINAL	CONNECTIONS
TERMINAL A	FAN RELAY
TERMINAL B	BATTERY
TERMINAL I	HOUR METER, ENGINE, CLUTCH SWITCH
TERMINAL S	START RELAY
TERMINAL X	SEAT DELAY, TILT SWITCH
TERMINAL Y	HOUR METER, ENGINE, CLUTCH SWITCH

POSITION	CIRCUIT "MAKE"	
1. OFF	NONE	
2. RUN	B + I + A	X + Y
3. START	B + I + S	

9. HYDRAULIC DIAGRAM

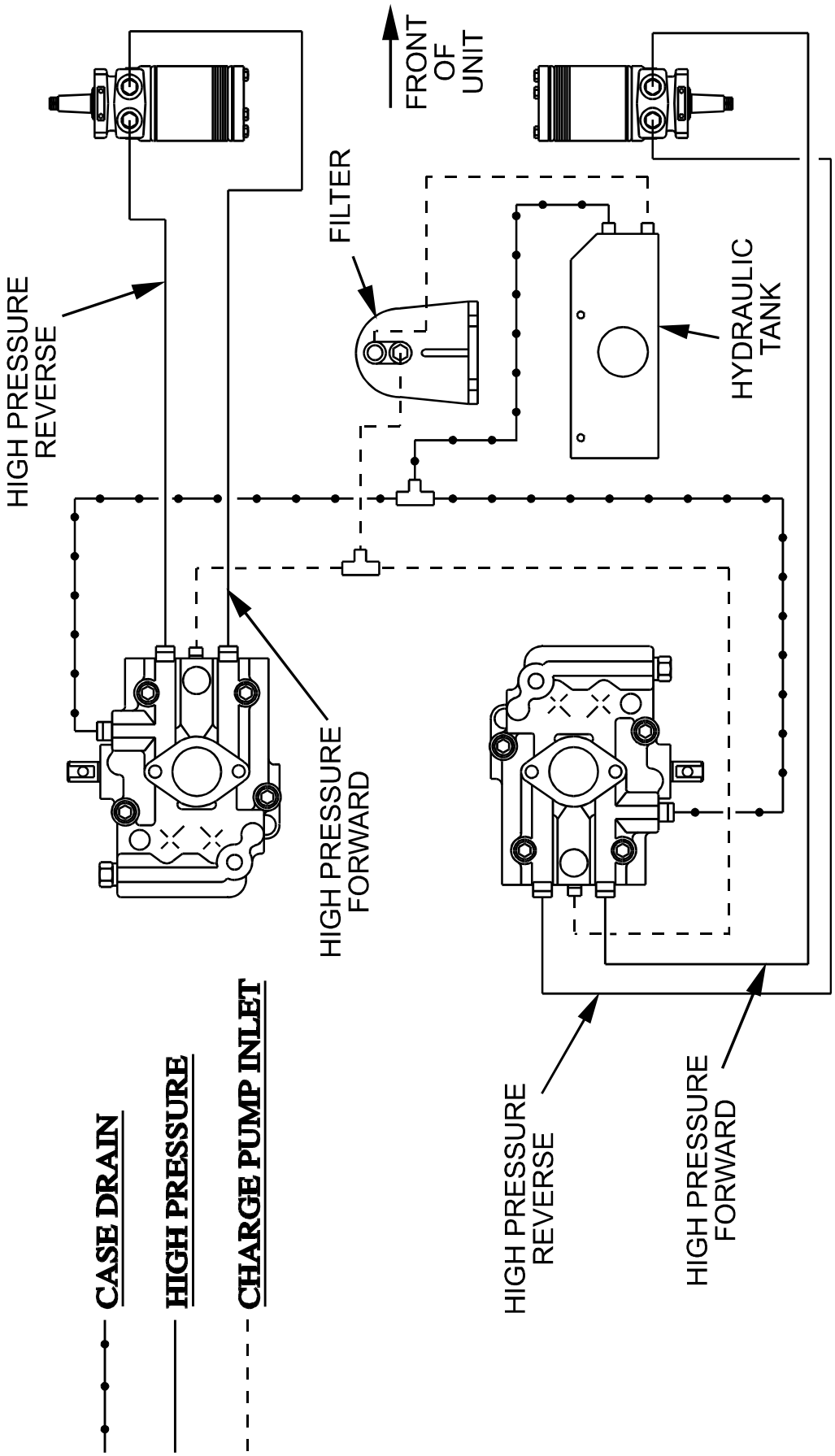

10. WARRANTY

Limited Warranty
Exmark Commercial Turf Equipment

Exmark Mfg. Co. Inc. and its affiliate, Exmark Warranty Company, pursuant to an agreement between them, jointly warrant on the terms and conditions herein, that we will repair, replace or adjust any part manufactured by Exmark and found by us (in the exercise of our reasonable discretion) to be defective in factory material or workmanship.

This warranty is limited to one year from the date of original retail purchase (90 days for rental use) for any Exmark mower that is used for commercial or any other income producing purpose. The blade spindle assemblies will be warranted for three years, one year parts and labor with an additional two years parts only, from date of original retail purchase against defects in materials or workmanship. The hydrostatic traction drive system, excluding hoses, will be warranted for two full years from date of original retail purchase against defects in materials or workmanship. We will extend the Peerless 5-speed transmission manufacturer's warranty from 90 days to one year. Belts and tires are warranted for 90 days against defects in materials or workmanship.

The engine warranty is covered by its respective engine manufacturer. Please refer to the engine manufacturers warranty statement that is included in the literature packet. We are not authorized to handle warranty adjustments on engines. Engine warranties should be referred to the nearest authorized service outlet of the engine manufacturer.

This warranty extends only to the original retail purchaser of the equipment. This warranty may not be assigned or transferred without the prior express written consent of Exmark and Exmark Warranty Company. The warranty period commences upon the date of the original retail purchase.

The Exmark turf equipment, including any defective part, must be returned to an authorized Exmark service dealer within the warranty period. The warranty shall extend to the expense of repair or replacement (as determined by us) of the defective part, including labor. The warranty shall not extend to the expense of delivering the mower to the dealer for warranty work nor the expense of returning it back to the owner after repair or replacement. Our responsibility in respect to claims is limited to making the required repairs or replacements, and no claim of breach of warranty shall be cause for cancellation or rescission of the contract of sale of any Exmark mower. Proof of purchase may be required by the dealer to substantiate any warranty claim. All warranty work must be performed by an authorized Exmark service dealer.

This warranty extends only to turf equipment operated under normal conditions and properly serviced and maintained. The warranty expressly does not cover: (i) any damage or deterioration due to normal use, wear and tear, or exposure; (ii) normal maintenance services, such as oil change, cleaning, lubrication; adjustment; (iii) replacement of service items, such as oil, lubricants, spark plugs, or other items subject to normal service replacement; (iv) damage or defects arising out of or relating to misuse, neglect, alteration, negligence or accident; (v) repair or replacement arising from operation of or use of the turf equipment which is not in accordance with operating instructions as specified in the operator's manual or other operational instructions provided by Exmark; (vi) repair or replacement arising as a result of any operation from turf equipment that has been altered or modified so as to, in the determination of Exmark or Exmark Warranty Company, adversely affect the operation, performance or durability of the equipment or that has altered, modified or affected the turf equipment so as to change the intended use of the product; (vii) repair or replacement necessitated by use of parts, accessories or supplies, including gasoline, oil or lubricants, incompatible with the turf equipment or other than as recommended in the operator's manual or other operational instructions provided by Exmark; (viii) repairs or replacements resulting from parts or accessories which have adversely affected the operation, performance or durability of the turf equipment; or (ix) damage or defects due to or arising out of repair of turf equipment by person or persons other than an authorized Exmark service dealer or the installation of parts other than genuine Exmark or Exmark recommended parts.

As a condition to this warranty, customer shall have read the operator's manual and shall have completed and returned to Exmark Warranty Company, within the prescribed time, the Exmark warranty registration.

The sole liability of Exmark and Exmark Warranty Company with respect to this warranty shall be repair and replacement as set forth herein. Neither Exmark nor Exmark Warranty Company shall have any liability for any other cost, loss or damage, including but not limited to, any incidental or consequential loss or damage. In particular, we shall have no liability or responsibility for: (i) expenses relating to gasoline, oil or lubricants; (ii) loss, cost or expense relating to transportation or delivery of turf equipment from the location of owner or location where used by owner to or from any authorized Exmark service dealer; (iii) travel time, overtime, after hours time or other extraordinary repair charges or charge relating to repairs or replacements outside of normal business hours at the place of business of the authorized Exmark service dealer; (iv) rental of like or similar replacement equipment during the period of any warranty, repair or replacement work; (v) any telephone or telegram charges or travel charges; (vi) loss or damage to person or property other than that covered by the terms of this warranty; (vii) any claims for lost revenue, lost profit or additional cost as a result of a claim of breach of warranty; or (viii) attorney's fees.

There are no representations or warranties which have been authorized and provided to the buyer of the turf equipment, other than as set forth in this warranty. Any and all statements or representations made by any seller of this equipment, including those set forth in any sales literature or made orally by any sales representative, are superseded by the terms of this warranty. Any affirmation of fact or promise made by Exmark , Exmark Warranty Company or any of their representatives to the buyer which relates to the goods that are the subject of this warranty shall not be regarded as part of the basis of the bargain and shall not be deemed to create any express warranty that such goods shall conform to the affirmation or promise.

THERE ARE NO UNDERSTANDINGS, AGREEMENTS, REPRESENTATIONS, OR WARRANTIES, EXPRESS OR IMPLIED (INCLUDING BUT NOT LIMITED TO ANY REGARDING THE MERCHANTABILITY OR FITNESS FOR A PARTICULAR PURPOSE), NOT SPECIFIED HEREIN, RESPECTING THE EQUIPMENT WHICH IS THE SUBJECT OF THIS WARRANTY.

This warranty applies to all Exmark turf equipment sold in the United States and Canada and intended to be used for commercial purposes.

NOTES

SERVICE RECORD

Date	Description of Work Done	Service Done By

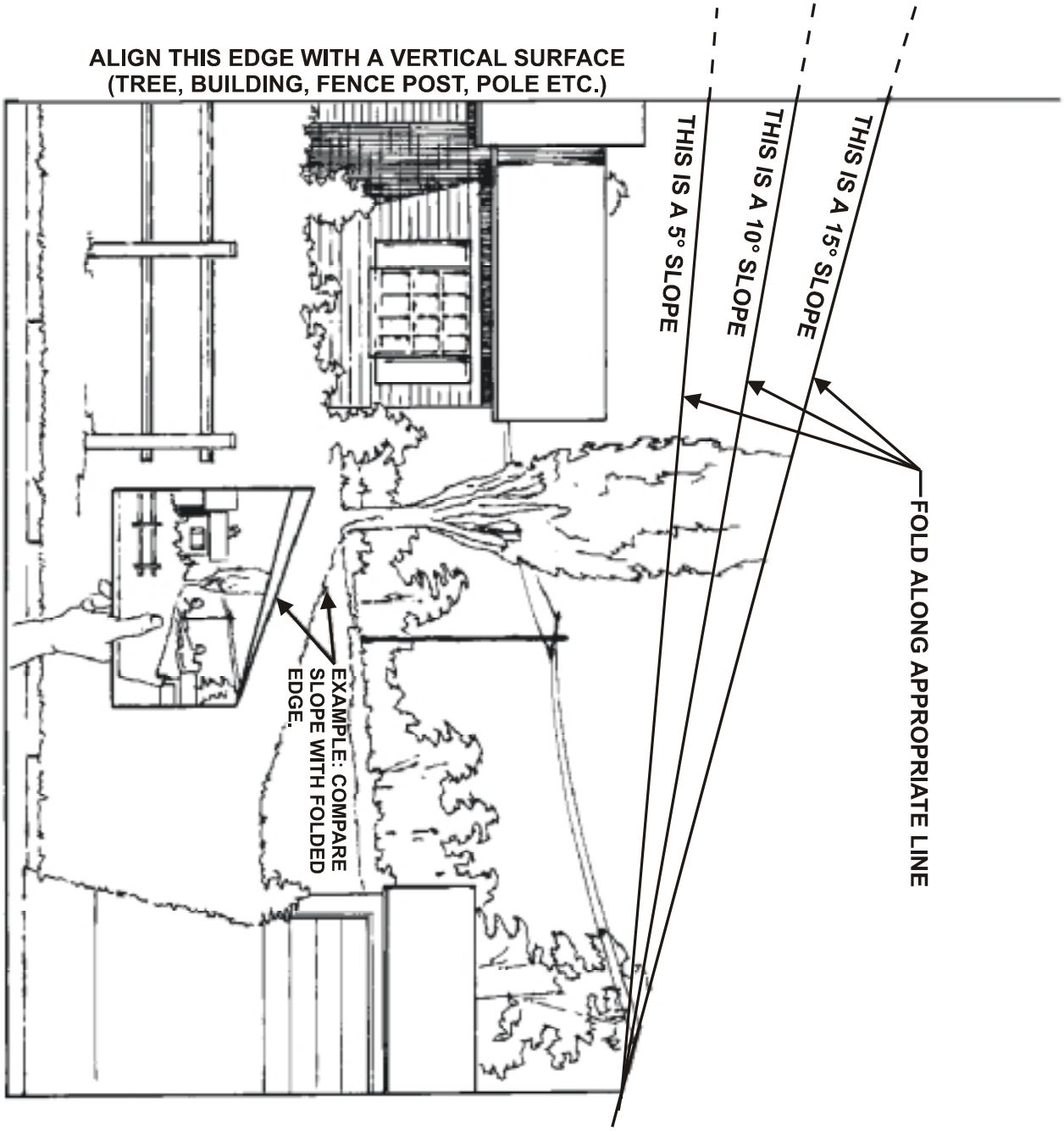
FOLD ALONG APPROPRIATE LINE
THIS IS A 15° SLOPE
THIS IS A 10° SLOPE
THIS IS A 5° SLOPE
EXAMPLE: COMPARE SLOPE WITH FOLDED EDGE.
ALIGN THIS EDGE WITH A VERTICAL SURFACE (TREE, BUILDING, FENCE POST, POLE ETC.)

SEE EXMARK'S COMPLETE LINE OF PRODUCTS FOR TURF CARE

LAZER Z®	LAZER Z® HP
LAZER Z® XP	TURF TRACER®
TURF TRACER®	TURF TRACER® HP
METRO®	METRO® HP
VIKING HYDRO	ULTRA VAC™
GRASS CATCHER	SELF STEERING SULKY

MICRO-MULCH ™ ACCESSORY

⚠ WARNING

The engine exhaust from this product contains chemicals known to the State of California to cause cancer, birth defects, or other reproductive harm.

©1997,1998,1999,2000,2001
EXMARK MFG. CO. INC.
INDUSTRIAL PARK BOX 808
BEATRICE, NE 68310
ALL RIGHTS RESERVED

PART NO. 103-0655 Rev B
(402) 223-6300
FAX (402) 223-5489

PRINTED IN U.S.A.

eXmark® MFG. CO. INC.