For Serial Nos.
130,000 & Higher

TURF RANGER

Operator's Manual

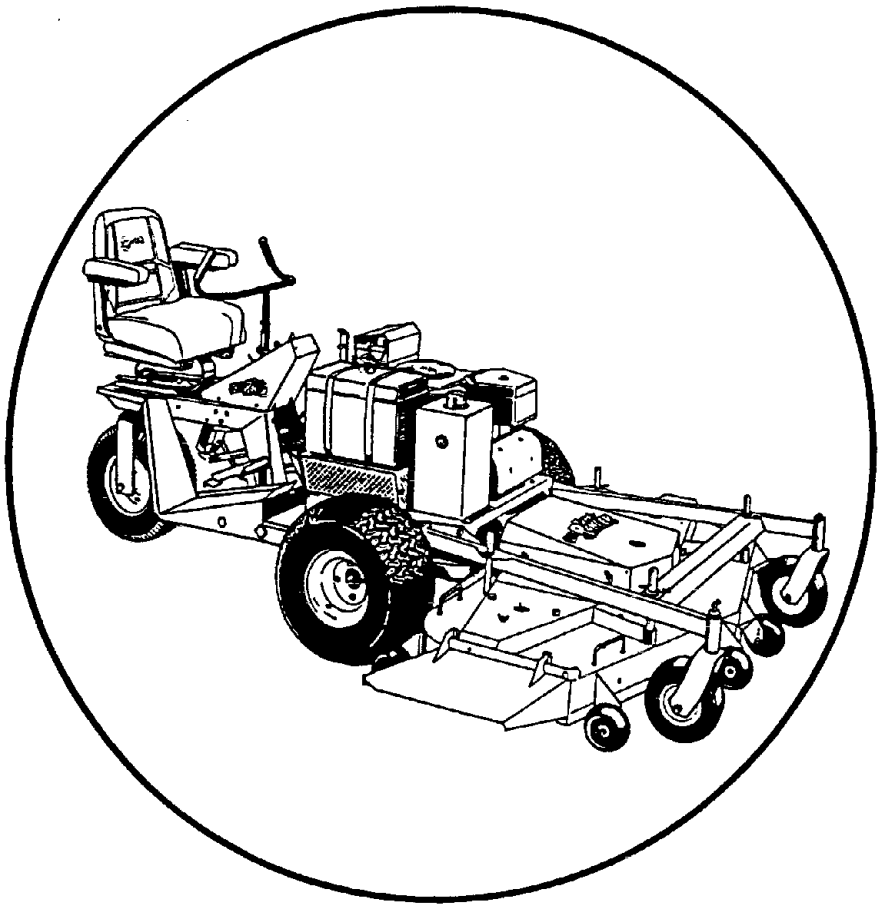

Part No. 850445

⚠ WARNING

FAILURE TO FOLLOW CAUTIOUS OPERATING PRACTICES CAN RESULT IN SERIOUS OPERATOR INJURY.

⚠ CAUTION

1. Keep all shields, guards and safety devices (especially grass discharge system) in place and in proper working condition.
2. Stop engine and remove spark plug wire(s) or remove key before adjusting, servicing, or preforming maintenance.
3. When mower deck becomes clogged, stop engine and remove spark plug wire(s) or remove key before cleaning blockage.
4. Keep hands, feet, and clothing away from power-driven parts.
5. Keep off mower unless seat or platform is provided.
6. Keep others off mower.

⚠ WARNING

The engine exhaust from this product contains chemicals known to the State of California to cause cancer, birth defects or other reproductive harm.

⚠ HEALTH WARNING

GASOLINE

Harmful or fatal if swallowed.
Long-term exposure to vapors has caused cancer in laboratory animals.

- **Avoid prolonged breathing of vapors.**
- **Keep face away from nozzle and gas tank/container opening.**
- **Keep away from eyes and skin.**
- **Never siphon by mouth.**

Failure to use caution may cause serious injury or illness.

Exmark reserves the right to make changes or add improvements to its products at any time without incurring any obligation to make such changes to products manufactured previously. Exmark, or its distributors and dealers, accept no responsibility for variations which may be evident in the actual specifications of its products and the statements and descriptions contained in this publication.

EXMARK PARTS PLUS® PROGRAM

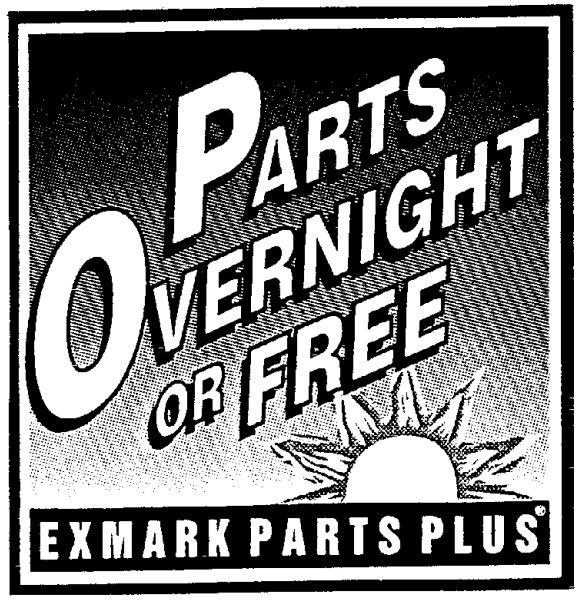

EFFECTIVE DATE: September 1, 1995

Program

If your Exmark dealer does not have the Exmark part in stock, Exmark will get the parts to the dealer the next business day or the part will be FREE* Guaranteed!!

How the Program Works

1. If dealer does not have part in stock for a "down" unit at the time of request by customer, the dealer contacts his distributor by 1:00 p.m., local time, and requests Exmark Parts Plus® shipment of six (6) line items or less.

2. Distributor ships part(s) to dealer or customer, as requested by dealer, same day, overnight UPS Distributor bills dealer for part and freight charges where applicable.

3. If distributor does not have the part(s) in stock to satisfy Exmark Parts Plus® order, he contacts Exmark by 3:00 p.m., central time, with an Exmark Parts Plus® order of six (6) line items or less.

4. If order is received by 3:00 p.m. central time, Exmark ships part(s) direct to dealer or customer, as requested by distributor, same day, overnight UPS Exmark bills the distributor for parts and shipping charges, where applicable.

5. The customer pays for the <u>part</u> and <u>freight</u> if it is shipped under the Exmark Parts Plus® and if it arrive in accordance to the program.

6. Who pays for the <u>part</u> and <u>freight</u> if it fails to arrive overnight in accordance to the program?

   A. Under any circumstance the customer does not pay.

   B. If the part does not arrive overnight due to:

      1. The dealer not submitting the Exmark Parts Plus® order to his Exmark distributor by 1:00 p.m., the dealer pays for the part and freight.

      2. The Distributor being unable to ship the part the same day or not submitting the Exmark Parts Plus® order to Exmark by 3:00 p.m., central time, the Distributor pays for the part and freight.

      3. Exmark being unable to ship the part and the Exmark parts order is received by 3:00 p.m., central time, Exmark pays for the part and freight.

      4. If the part does not arrive overnight due to the shipper (UPS), the shipper pays for the freight and Exmark pays for the part.

<u>**The following restrictions apply**</u> -- The Exmark Parts Plus® Program is available only through participating Exmark Dealers and applies only to orders submitted on this program Monday through Thursday. UPS has initiated a Saturday delivery program to many areas of the continental United States and can be requested for an overnight shipment on Friday to be delivered Saturday. The next day air charge, plus the Saturday delivery fee will be the responsibility of the purchaser. Exmark Mfg. will assume no responsibility for Saturday delivery shipments. To qualify, all Exmark Parts Plus® orders must be received by Exmark by 3:00 p.m., central time. Orders must be six (6) line items or less. Exclusions from the Exmark Parts Plus® Program are: Any wholegood or accessory in its entirety, engines and engine replacement parts, 5-speed Peerless transmissions and 5-speed transaxles, hydraulic or hydrostatic wheel motors, cutter decks and engine decks or any item exceeding United Parcel Service size and weight restrictions.

Due to UPS restrictions, aerosol spray paint is considered a hazardous material and cannot be shipped via UPS next day or Second Day Air.

Exmark Manufacturing stocks a limited supply of parts for transaxles, pumps and wheel motors. These parts can be ordered for Next Day Air shipment but will not be guaranteed per the Parts Plus Program.

CONGRATULATIONS on the purchase of your Exmark Mower. This product has been carefully designed and manufactured to give you a maximum amount of dependability and years of trouble-free operation.

OPERATOR'S MANUAL

This manual contains assembly, operating, maintenance, adjustment and safety instructions for your Exmark mower. **BEFORE OPERATING YOUR MOWER, CAREFULLY READ THIS MANUAL IN ITS ENTIRETY.** By following the operating, maintenance and safety instructions, you will prolong the life of your mower, maintain its maximum efficiency and promote safe operation.

If additional information is needed, or should you require trained mechanic service, contact your authorized Exmark equipment dealer or distributor.

All Exmark equipment dealers and distributors are kept informed of the latest methods of servicing and are equipped to provide prompt and efficient service in the field or at their service stations. They carry ample stock of service parts or can secure them promptly for you from the factory.

All Exmark parts are thoroughly tested and inspected before leaving the factory, however, attention is required on your part if you are to obtain the fullest measure of satisfaction and performance.

If you need to order replacement parts from your dealer, always give the model number and serial number of your mower as well as the quantity, part number and description of the part needed.

The serial number plate of the tractor is located on the right hand rear surface of the engine deck below fuel tank. The serial number plate for the deck is located on the front support pin gusset on the right hand side of deck. We suggest you record the numbers below for ready reference.

Tractor Model No._____

Tractor Serial No._____

Deck Model No._____

Deck Serial No._____

Date Purchased_____

Purchased From_____

OR

PASTE LABEL FROM LITERATURE PACKET HERE

TABLE OF CONTENTS

1. SAFETY ..... PAGE

1.1 Safety Alert Symbol 1
1.2 Training 1
1.3 Preparation 1
1.4 Operation 2-3
1.5 Maintenance & Storage 4
1.6 Safety Signs 5-7

2. SPECIFICATIONS

2.1 Model Number 8
2.2 Engine 8
2.3 Fuel System 8
2.4 Electrical System 8
2.5 Operator Controls 8
2.6 Seat 9
2.7 Hydrostatic Ground Drive System 9
2.8 Tires 9
2.9 Deck 9
2.10 Dimensions 10

3. ASSEMBLY INSTRUCTIONS

3.1 to 3.8.7 Assembly 10-14

4. CONTROLS 14-15

5. OPERATION INSTRUCTIONS

5.1 Pre-Start 15-16
5.2 Mowing 16
5.3 Transporting 16

6. MAINTENANCE & ADJUSTMENTS

6.1 Periodic Maintenance 17-23
6.2 Adjustments 24-30

7. TROUBLE SHOOTING

7.1 Mower Cuts Unevenly 30
7.2 Blades Do Not Stop 30

8. WIRING DIAGRAMS 33

9. WARRANTY 34-35

1. SAFETY

1.1 SAFETY ALERT SYMBOL

THIS SAFETY ALERT SYMBOL ⚠ IS USED BOTH IN THIS MANUAL AND ON THE MACHINE TO IDENTIFY IMPORTANT SAFETY MESSAGES WHICH MUST BE FOLLOWED TO AVOID ACCIDENTS. THIS SYMBOL MEANS:

ATTENTION! BECOME ALERT!

YOUR SAFETY IS INVOLVED!

The safety alert symbol appears above information which alerts you of unsafe actions or situations and will be followed by the word DANGER, WARNING, or CAUTION.

When used with the word DANGER: IT DENOTES THAT AN EXTREME HAZARD EXISTS WHICH WOULD RESULT IN HIGH PROBABILITY OF DEATH OR IRREPARABLE INJURY IF PROPER PRECAUTIONS ARE NOT TAKEN.

When used with the word WARNING: IT DENOTES THAT A HAZARD EXISTS WHICH CAN RESULT IN INJURY OR DEATH IF PROPER PRECAUTIONS ARE NOT TAKEN.

When used with the word CAUTION: IT DENOTES A REMINDER OF SAFETY PRACTICES OR DIRECTS ATTENTION TO UNSAFE PRACTICES WHICH COULD RESULT IN PERSONAL INJURY IF PROPER PRECAUTIONS ARE NOT TAKEN.

1.2 TRAINING

1.2.1 Regard the Exmark mower as a piece of power equipment and teach this regard to all who operate this unit.

1.2.2 Read the instructions carefully. Familiarize yourself with the controls and the proper use of the equipment.

1.2.3 Never allow children, teenagers, or people unfamiliar with these instructions to use the mower.

1.2.4 Avoid mowing while people, especially children or pets, are nearby. Keep in mind that the operator or user is responsible for accidents or hazards occurring to other people or their property.

1.3 PREPARATION

1.3.1 The use of personal protective equipment, such as (but not limited to) protection for the eyes, ears, feet and head is recommended.

1.3.2 While mowing, always wear substantial footwear and long trousers. Do not operate equipment when barefoot or when wearing open sandals.

1.3.3 Thoroughly inspect the area where the equipment is to be used and remove all stones, sticks, wires, bones and other foreign objects.

1.3.4 Always set the park brake before starting the engine.

⚠ DANGER

- Fuel is *Highly Flammable*. *DO NOT* smoke while refueling. Refuel only in a well ventilated area, or refuel outdoors.
- Store fuel in containers specifically designed for this purpose.
- Add fuel before starting the engine. *Never* remove the cap of the fuel tank or add fuel when engine is running or when the engine is hot.
- If fuel is spilled, *DO NOT* attempt to start the engine. Move away from the area of the spill and avoid creating any source of ignition until fuel vapors have dissipated.

1.4 OPERATION

1.4.1 Give complete, undivided attention to the job at hand.

⚠ DANGER

- *DO NOT* operate the engine in a small confined area where dangerous carbon monoxide fumes can collect.

1.4.2 Mow only in daylight or good artificial light. NEVER carry passengers. DO NOT operate the mower when children or others are in the area.

1.4.3 When feasible, avoid operating the equipment in wet grass.

1.4.4 Use **EXTREME** caution when mowing and/or turning on slopes as loss of control and/or tip over could occur. Drive slower on slopes. *DO NOT* operate on slopes greater than 15 degrees. Watch for ditches, holes, rocks, dips, and rises which change the operating angle. Keep away from drop-offs and steep banks. Mow up and down slopes - not across. Mower tips more easily to the side than to the side than to the front or the rear. Avoid sudden starts and turns. Loss of control may occur going downhill - weight transfer may cause rear wheel to lift off and cause loss of steering. *DO NOT* mow slopes when grass is wet - slippery conditions affect steering and reduce traction and braking. The operator is responsible for safe operation on slopes.

1.4.5 Use **EXTREME** caution when backing up. **LOOK BEHIND YOU!**

1.4.6 Stop the blades when crossing surfaces other than grass; and when transporting the mower to and from the area to be mowed.

1.4.7 Never operate the mower with defective guards, shields, or covers. Always have safety shields, guards, switches, and other devices in place and in proper working condition.

1.4.8 *Do Not* change the engine governor settings or overspeed. the engine. Operating an engine at excessive speed may increase the hazard of personal injury.

1.4.9 Place transmission in neutral, disengage blade drive before starting engine

1.4.10 Start the engine carefully with feet well away from the blades.

1.4.11 Keep hands, feet and clothing away from rotating parts while the mower is being operated.

1.4.12 Stop the engine and remove ignition key:

a) Before checking, cleaning or working on the mower.

b) After striking a foreign object (inspect the mower for damage and make repairs before restarting and operating the mower).

c) Before clearing blockages.

d) Whenever you leave the mower.

e) Before refueling.

f) Before making height adjustments.

1.4.13 Before stopping the engine, return the throttle control to the idle position for 30 seconds to allow the engine to cool down.

1.4.14 The fuel system is provided with a shut-off valve. The fuel shut-off valve is used to shut off the fuel when:

a) The machine will not be used for a few days.

b) During transport to and from the job.

c) When parking inside a building.

1.4.15 This mower was designed for one operator only. Keep all others away from mower during operation.

1.4.16 *Do Not* mow without the grass deflector or entire grass collection system in place and in proper working condition.

⚠ CAUTION

- **Failure to follow safety instructions and cautious operating practices can result in serious injury.**

1.4.17 If jump starting is required:

a) connect the positive (+) power cable to the battery which will be used to jump the dead battery, then connect the other end of the cable to the positive (+) power terminal post on the starter solenoid switch (this post has the positive battery cable attached to it).

b) Connect the negative or ground cable (-) to the negative post on the battery which will be used to jump the dead battery, then connect the other end of

the cable to any engine deck ground, preferably the engine block.

c) Disconnect battery cables in the reverse order after starting.

⚠ CAUTION

- **Although hazard control and accident prevention partially are dependent upon the design and configuration of the equipment, these factors are also dependent upon the awareness, concern, prudence and proper training of the personnel involved in the operation, transport, maintenance and storage of the equipment. It is essential that all Operator Safety Mechanisms be connected and in operating condition prior to use for mowing.**

1.5 MAINTENANCE AND STORAGE

1.5.1 For engine maintenance, follow the engine manufacture's recommendations precisely as stated in the engine manual.

1.5.2 If carburetor adjustment is necessary, stand to one side and keep feet and hands clear while making adjustments.

1.5.3 Keep engine and engine area free from accumulation of grass, leaves, excessive grease or oil and other debris which can accumulate in these areas. These materials can become combustible and may result in a fire.

1.5.4 Store fuel in a container specifically designed for this purpose in a cool, dry place.

1.5.5 Keep the mower and fuel container in locked storage to prevent children from playing or tampering with them.

1.5.6 Gasoline powered equipment or fuel containers should not be stored in a basement or any enclosed area, where open pilot lights or heat appliances are present.

1.5.7 Maximum mowing results and safety can only be achieved if the mower is properly maintained and operated correctly.

1.5.8. Check all bolts frequently to maintain proper tightness.

1.5.9. Keep all guards, shields and all safety devices in place and in safe working condition.

1.5.10 Frequently check for worn or deteriorating components that could create a hazard.

1.5.11 All replacement parts must be the same as or equivalent to the parts supplied as original equipment.

⚠ CAUTION

- Make sure all hydraulic fluid hoses and lines are in good condition and all hydraulic connections and fittings are tight before applying pressure to hydraulic system.

⚠ CAUTION

- Hydraulic fluid escaping under pressure may have sufficient force to penetrate skin and cause serious injury. If foreign fluid is injected into the skin, it must be surgically removed within a few hours by a doctor familiar with this type of injury or gangrene may result.

⚠ CAUTION

- Keep body and hands away from pin holes or nozzles that eject hydraulic fluid under high pressure. Use paper or cardboard, *NOT HANDS* to search for leaks.

⚠ CAUTION

- Safely relieve all pressure in the system before disconnecting lines or before performing any work the system.

1.6 SAFETY SIGNS

1.6.1 Keep all safety signs legible. Remove all grease, dirt and debris from safety signs.

1.6.2 Safety signs must be replaced if they are missing or illegible.

1.6.3 When new components are installed, be sure that current safety signs are affixed to the replaced components.

1.6.4 New safety signs may be obtained from your authorized Exmark equipment dealer or distributor or from Exmark Mfg. Co. Inc.

1.6.5 Safety signs may be affixed by peeling off the backing to expose the adhesive surface. Apply only to a clean, dry surface. Smooth to remove any air bubbles

1.6.6 Familiarize yourself with the following safety signs and instruction labels. They are critical to the safe operation of your Exmark commercial mower.

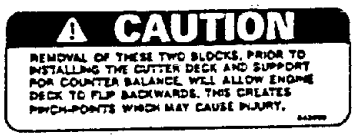

LOCATION: Under Engine Deck Pivot Stops - Both Sides

PART NO.: 543896

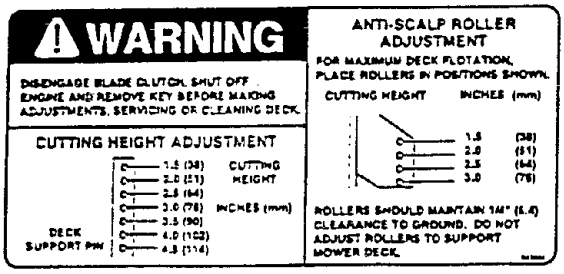

PART NO.: 543660

LOCATION: On Top Front LH Surface of Mower Deck

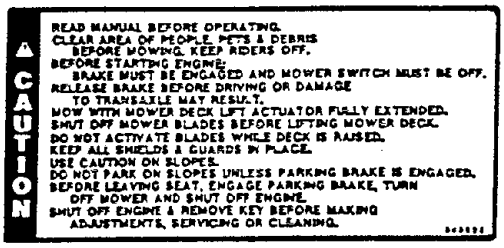

PART NO.: 543628

LOCATION: Back Side of Battery Support

PART NO.: 543774

LOCATION: Bottom Center of Steering Console

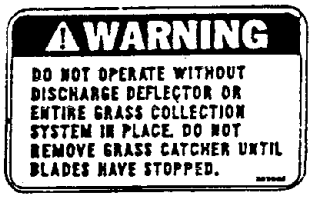

PART NO.: 303508

LOCATION: On Top RH Surface of Mower Deck

LOCATION: LH and RH Front Top Surface of Mower Deck

PART NO.: 403005

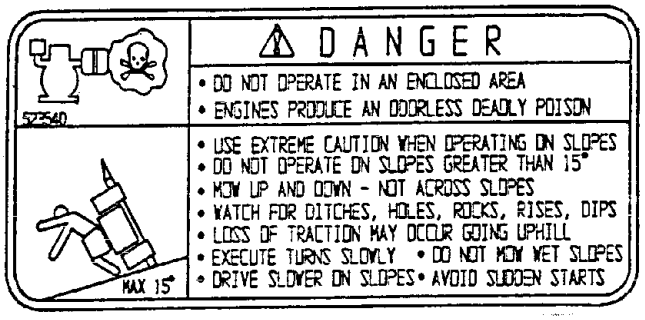

PART NO. 523540

LOCATION: Bottom Center of Steering Console

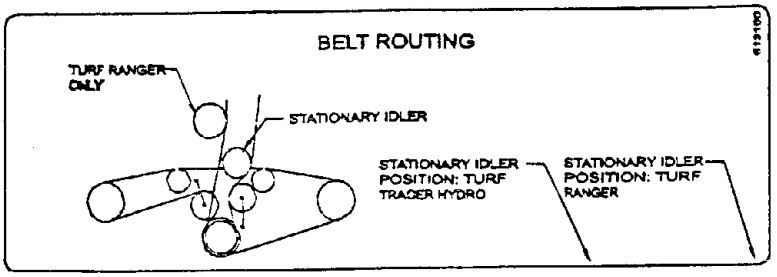

PART NO. 613100

LOCATION: Top of Mower Deck Beneath Center Shield

LOCATION: Top Front of Battery Cover

PART NO.: 513747

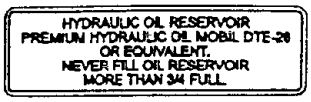

LOCATION: Top Surface of Hydraulic Reservoir

PART NO.: 543949

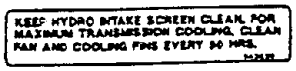

LOCATION: On Intake Screen Just Below Rear of Fuel Tank

PART NO.: 543620

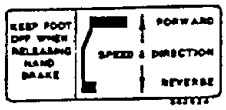

LOCATION: Front of Rider Frame Right Foot Support

PART NO.: 543624

LOCATION: Left Side of Brake Lever

PART NO.: 543622

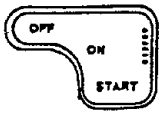

LOCATION:
Top Center of
Steering Console

PART NO.: 513739

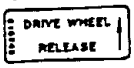

LOCATION:
Side of Drive
Wheel Release Lever

PART NO.: 513743

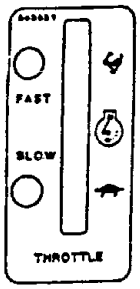

LOCATION:
Top Right of
Steering Console

PART NO.: 543631

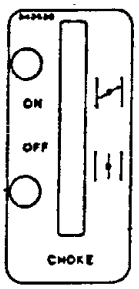

LOCATION:
Top Left of
Steering Console

PART NO.: 543630

LOCATION:
Top Front LH
Surface of Engine
Deck Next To
Muffler

PART NO.: 513746

LOCATION: Top Surface
of Fuel Tank

PART NO.: 303293

LOCATION: Left Center of
Steering Console

PART NO.: 543627

LOCATION: Right Center of
Steering Console

PART NO.: 543626

2. SPECIFICATIONS

2.1 Model Number: TR22KC

2.2 ENGINE

2.2.1 Engine Specifications:
See your engine owners manual.

2.2.2 3600 RPM (No Load)

2.3 FUEL SYSTEM

2.3.1 Capacity: 5.0 gal. (18.9 L.)

2.3.2 Type of Fuel: Regular unleaded gasoline 87 octane or higher. In countries using the research method, it should be a 90 octane *minimum*.

2.3.3 Fuel Filter: Replaceable in-line

2.3.4 Fuel Shut-Off Valve: 1/4 turn

2.4 ELECTRICAL SYSTEM

2.4.1 Charging System: Flywheel alternator

2.4.2 Charging Capacity: 15 amp Kohler Engine

2.4.3 Battery Type: BCI Group U1, 235 amps at 0° F

2.4.4 Battery Voltage: 12 Volt Polarity: Negative ground

2.4.5 Fuses: 20, and 30 amp blade type, 20 amp to charging circuit; 20 amp to electric clutch; 30 amp to electro-mechanical actuator.

2.4.6 Safety Interlock System:

Operator must be positioned in the seat with cutting blades *disengaged* and brake *engaged* to start engine.

Operator must be in seat when cutting blades are engaged or when brake is disengaged or the engine will stop.

2.5 OPERATOR CONTROLS

2.5.1 Steering Control: Aircraft-style steering yoke with foam hand grips.

2.5.2 Motion Control: Single foot pedal operated by the right foot. Provides forward and reverse speed control with little effort.

Motion control pedal and its' linkages are protected by the motion override device when the parking brake is engaged.

2.5.3 Parking Brake Lever: Sets brake and locks drive system in neutral.

Neutral lockout system prevents accidental engagement of drive system when parking brake is engaged and protects hydro-transaxle from potential damage.

2.6 SEAT

2.6.1 Type: Contoured, molded nylon backed vinyl. Self draining.

2.6.2 Mounting: Hinged to activate seat switch and attached to seat spring for maximum comfort over rough terrain. Adjustable fore and aft

2.6.3 Time delay seat switch eliminates rough ground cut-outs.

2.6.4 Armrests: Standard.

2.7 HYDROSTATIC GROUND DRIVE SYSTEM

2.7.1 Hydrostatic transmission Eaton 851 transaxle with 23:1 reduction ratio.

2.7.2 Hydrostatic direction control system is protected by a neutral lockout system.

2.7.3 Hydraulic Oil Type: Mobil DTE - 26 or equivalent

2.7.4 Hydraulic Oil Capacity: 8.5 qts. (8.0 L.)

2.7.5 Filter: Replaceable cartridge type

2.7.6 Speeds: 0 - 6.4 mph (10.2 km/hr) forward
0 - 3.2 mph (5.1 km/hr) reverse

2.7.7 Drive wheel release lever allows machine to be moved when engine is not running.

2.8 TIRES

		Rear	Drive	Front Caster
2.8.1	Size	18 x 6.50-8	20 x 10.00-8	9 x 3.50-4
2.8.2	Quantity	1	2	2
2.8.3	Tread	Turfsaver	Turfmate	Smooth
2.8.4	Ply Rating	4	4	4
2.8.5	Pressure	14 psi (97 kPa)	20 psi (138 kPa)	22 psi (152 kPa)

2.9 DECK

2.9.1 Cutting Width: 60 in.(152.4 cm.)
52 in.(132.08 cm.)

2.9.2 Discharge: Right Side

2.9.3 Optional Mulch Kit and Bagger available.

2.9.4 Blade Size: 60" - (3 ea.) 20.50 in.(52.1 cm.)
52" - (3 ea.) 18.00 in.(45.72 cm.)

2.9.5 Type of Drive: Electric clutch mounted on engine shaft. Blades driven by two belts with self tensioning idlers.

2.9.6 Adjustable anti-scalp rollers(6 ea.)

2.9.7 Cutting Height: Adjusts in 1/2"(1.3 cm) increments from 1 1/2"(3.8 cm) to 4 1/2"(11.5 cm).

2.9.8 Deck Mounting: Full floating deck is attached to out-front support frame. Removable for servicing.

Can be raised by one-touch electro-mechanical ball screw deck lift system for servicing and cleaning or to transfer weight to drive wheels which aides in climbing hills.

2.10 DIMENSIONS

2.10.1 Overall Width (without deck) 49.9"(126.8 cm)

	w/52" Deck	w/60" Deck
Discharge chute down	62.7" (159.26 cm)	70.5" (179.1 cm)
Discharge chute up	53.0" (134.62 cm)	60.9" (154.6 cm)

2.10.2 Overall Length (without deck) 70.2"(178.3 cm)

	w/52" Deck	w/60" Deck
Overall Length	109" (276.9 cm)	108.38" (275.3 cm)

2.10.3 Curb Weight:

	w/52" Deck	w/60" Deck
Total weight	924 lbs. (420 kg)	954 lbs. (433 kg)

2.10.4 Overall Height: 44.0"(111.8)

2.10.5 Wheel Base: 50.5"(128.3 cm)

2.10.6 Tread Width (drive wheels): 39.75"(101 cm)

3. ASSEMBLY INSTRUCTIONS

3.1 Uncrate tractor and cutter deck.

3.2 Remove seat cushion from seat frame. Remove seat frame from crate and discard mounting hardware. Mount seat to unit using two 5/16-18 x 3/4" bolts, two 3/8 flat washers and whizlock nuts from bolt bag in front two holes. Install flat washers between seat and seat frame. Mount seat to two rear bolts (which have springs on them), by removing the top whizlock nuts, installing seat frame, and replacing nuts. Reinstall cushion to seat frame.

3.3 Mount the rear tire and wheel assembly with a 5/8-11 x 10-1/2" bolt and torque nut. Tighten torque nut just enough to create a slight drag on the wheel while the wheel is being rotated.

Inflate tire to 14 psi(95 kPa).

3.4 Mount both drive wheels securing them with four (4) wheel nuts each. Inflate tires to 20 psi (138 kPa).

3.5 Install steering handle bar with a 3/8-16 x 1-1/2" bolt and nylock nut.

3.6 Install cutter deck to tractor.

3.6.1 Activate drive wheel release lever (See Figure 1 and Section 4.11. Roll tractor to cutter deck and cutter deck support aligning them so the tractor is positioned for ease of mounting the deck support.

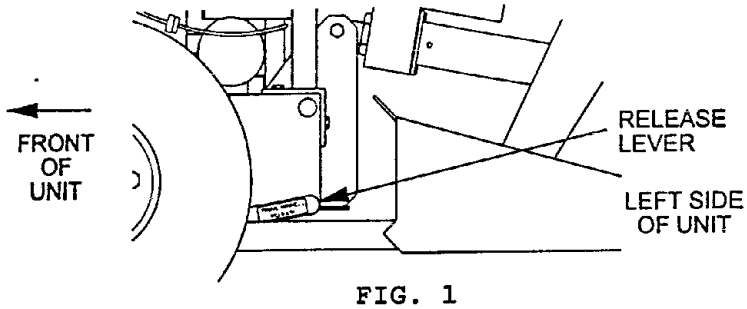

FIG. 1
DRIVE WHEEL RELEASE LEVER

3.6.2 Remove cutter deck support frame from cutter deck by removing the two large hairpins and washers from the front deck support pins and remove the small hairpins and washers from the rear deck support pins.

3.6.3 Lift up on support frame until it clears the support pins. Position support frame so the arms are on each side of the tractor engine deck and secure using eight (8) 3/8-16 x 1" bolts, disc spring washers, and whizlock nuts.

NOTE: Place spring washer cone against bolt head and install with the whizlock nut to the ***inside of engine deck*** for the two ***rear*** holes on both sides.
Install whizlock nut to the ***outside*** for the two ***front*** bolt holes on each side of the ***cutter deck support frame***. (See Figure 2). Tighten until spring washers are flat.

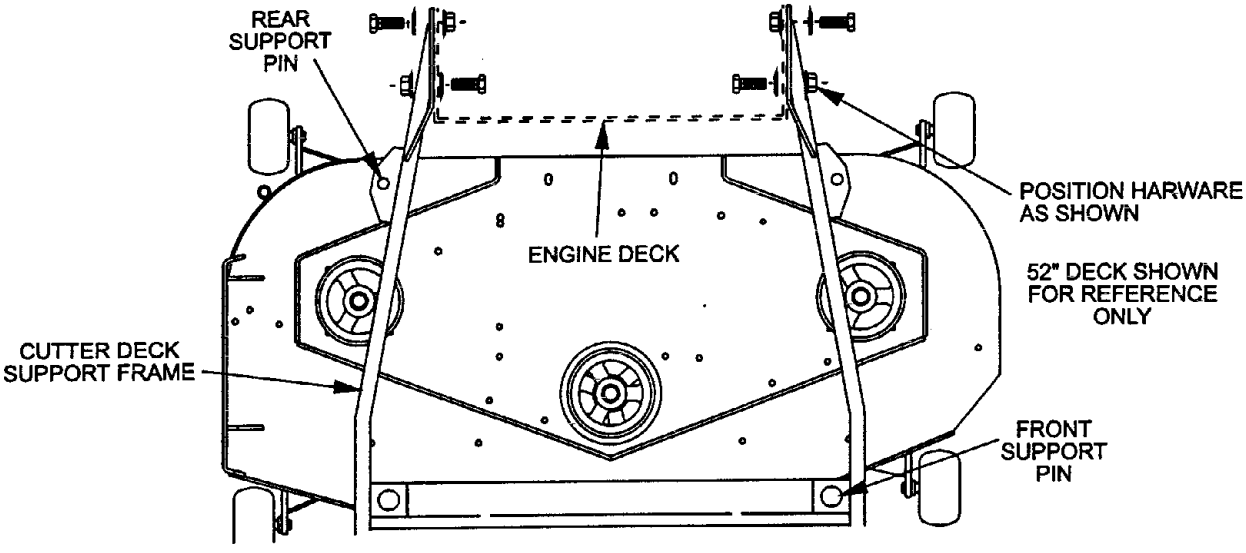

FIG. 2
HARDWARE AND SUPPORT PIN
LOCATION FOR
DECK SUPPORT FRAME

3.6.4 Position tractor, with cutter deck support frame in place, over the cutter deck. Align support frame above cutting deck and position it so the support pins on the deck align with the mounting holes in the support frame. Lower support frame onto deck and Reinstall the two large hairpins and washers on the front support pins and the two smaller hairpins and washers onto the rear

support pins (See Figure 2).

3.6.5 After the cutter deck support frame and the attached cutter deck are in place, it is necessary to remove the two wooden blocks under the engine deck pivot stops.

⚠ CAUTION

- **Keep hands clear. These are potential pinch points.**

3.6.6 Install cutter deck stationary idler. Locate two holes along the back center section of the cutting deck. Install the stationary idler and related parts in the left hand hole location as shown in Figure 3. See belt routing decal on deck. Be sure the coned end of the disc spring is against the head of the bolt as illustrated (see Figure 3).

3.6.7 Install cutter deck drive belt.

NOTE: Make sure to use proper belt for your deck. The belt (Part #543523) that is installed on the unit is for 60" decks only. For 52" decks, the belt (Part #543749) from the bolt bag must be used.
Refer to belt routing decal on deck. Slip belt between clutch drive sheave and drive wheel release rod (make sure belt is in the sheave groove. Place the other end of the belt over cutter deck drive sheave and rotate this sheave until the belt slips into sheave groove. Pull tensioning idler assembly back to allow belt to engage tensioning idler sheave and stationary idler sheave. Check fixed idler sheave on engine deck to make sure the belt also travels in the idler sheave groove.

Install the center cutter deck belt shield.

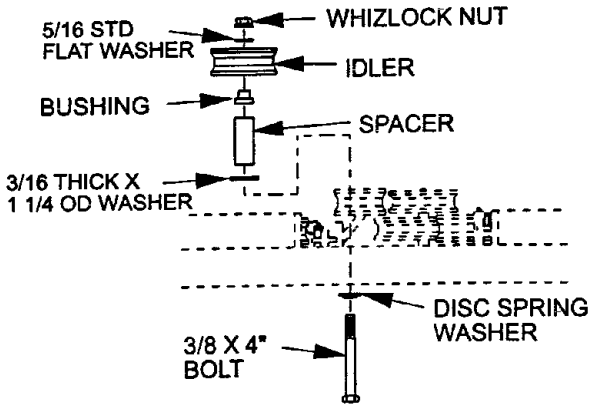

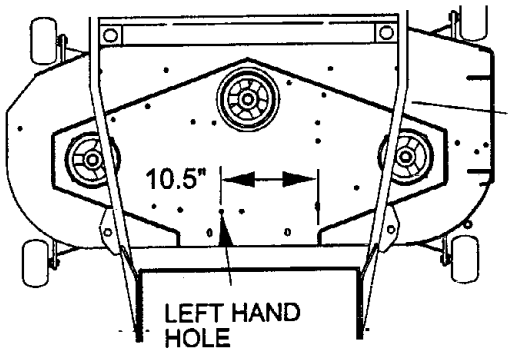

FIG 3
IDLER PULLEY KIT
AND LOCATION

3.6.8 Adjust cutting height of deck and anti-scalp rollers. See Section 6.2.1. (Adjustments).

3.7 Service engine: See Engine Operator's Manual.

3.8 Service battery: Machine is shipped with battery dry.

⚠ WARNING 613747

BATTERY CONTAINS SULFURIC ACID, AVOID CONTACT AND ALWAYS SHIELD EYES, FACE, SKIN AND CLOTHING FROM BATTERY. CIGARETTES, FLAMES OR SPARKS COULD CAUSE BATTERY TO EXPLODE. DO NOT CHARGE OR USE BOOSTER CABLES OR ADJUST POST CONNECTIONS WITHOUT PROPER TRAINING. IN EVENT OF AN ACCIDENT FLUSH WITH WATER AND CALL A PHYSICIAN IMMEDIATELY. KEEP OUT OF REACH OF CHILDREN.

3.8.1 Remove battery cover from machine. Disconnect the battery cables (negative (black) cable first) and lift the battery out.

⚠ DANGER

- **Be sure ignition is "OFF" and key is removed before disconnecting or installing the battery.**
- **Keep sparks and flame away from battery at all times.**

3.8.2 Place battery on a level surface and remove vent caps.

3.8.3 Fill cells with battery grade sulfuric acid (1.625 specific gravity). Fill until halfway between top of separators and bottom of vent well.

3.8.4 Check acid temperature and state of charge:

a) Put battery thermometer in center cell. Acid temperature must be at least 80° F(26.7° C)

b) Check state of charge with an electrical battery tester, or a battery hydrometer.

If using an electrical battery tester, charge must be "Good".

If using an hydrometer the specific gravity must be at least 1.250.

3.8.5 If acid temperature is not 80° F (26.7° C) or state of charge is not "Good", charge at 15 amps (20 amp max).

⚠ CAUTION

- **Acid temperature must never exceed 125°F(51.7° C) while charging. Slow charging is permissible.**

3.8.6 After charging, add battery acid until it reaches the bottom of the vent wells and install vent caps. Prior to installing the battery back onto the unit, check battery with a hi-rate load tester (following the printed instructions on the tester). "State of Charge" and "Condition" must be indicated as "Good" or "OK".

3.8.7 Install battery in machine. Connect cables to terminal posts, positive(red) cable first, then negative(black) cable. Reinstall battery cover.

4. CONTROLS

4.1 Steering Handle Bar: Located in center of steering console in front of operators seat. During forward operation of the machine, a movement of the steering handle to the right will cause the machine to turn to the right and vice versa. The steering system is chain connected from the steering shaft sprocket to the yoke sprocket. The chain has two adjustable connectors.

4.2 Motion Control Pedal: Located on the right side of steering console. The foot pedal controls the forward and reverse operation with foot motion. To increase forward speed press front pedal down until desired speed is obtained, to increase reverse speed press back pedal down until desired speed is obtained.

Movement of the front pedal down will cause the machine to go forward. To stop forward travel, remove foot from pedal. The neutral centering device moves the motion pedal back to the neutral position.

For reverse motion, place foot heel on the rear pedal pad and press downward. Remove foot from pedal to stop reverse motion. The pedal automatically returns to neutral. When parking brake is engaged, the motion control pedal can be moved but will not function.

4.3 Electro-mechanical deck lift control: Switch is located on left side of control console. Moving the toggle switch lever forward will lower the cutting deck. Moving the lever backward will raise the deck. Normal operation is with the actuator fully extended.

The actuator has an internal clutch to protect it from excessive loads. When raising or lowering the deck and the actuator has reached it's limit, a ***"ratcheting"*** sound is heard. When this ratcheting sound is heard, release switch lever, momentarily reverse switch to move actuator just off the fully extended or retracted position.

4.4 Electric Blade Clutch Engagement: Switch is located on right side of control console. Moving the toggle switch *ahead* will *engage* the blade clutch and moving it to the *rear* will *disengage* the blade clutch.

Switch lever must be *pulled out* to be moved forward to the **"ON"** position. Operator must be in the seat when blades are engaged or engine will stop.

4.5 Choke Control: Located on the control console left side. The choke control is used to aid in starting a cold engine. **"OFF"** position is to the rear and **"ON"** is to the front. ***Do Not*** run a warm engine with choke in the **"ON"** position.

4.6 Throttle Control: Located on the control console right side next to the choke control. Throttle is used to control engine speed. Moving throttle control ahead will increase engine speed and moving it to the rear will decrease engine speed.

4.7 Hand Brake Lever: Located ahead and near the right side of control console. Hand brake lever engages a parking brake on

the drive wheels and also locks the hydrostatic drive system in neutral. Moving the lever rearward will engage the brake. To disengage brake, lift finger latch and move brake ahead. Operator must be in the seat when brake is disengaged or engine will stop.

4.8 Ignition Switch: Located on the control console just ahead of the steering handle. The ignition switch has three positions "OFF", "ON" and "START". Insert key into switch and rotate to the right to the "ON" position. Keep rotating right, to the "START" position to engage starter (key must be held against spring pressure to start). Operator must be in seat with *brake engaged* and *blade clutch disengaged* to start engine. When engine starts, release key. ***DO NOT*** leave key in the "ON" position without engine running, this will run down the battery.

4.9 Hour Meter: Located on the steering console just below the steering wheel. The hour meter records the number of hours that the engine has run. If ignition switch is left on without engine running, hour meter will not run.

4.10 Fuel Shut-Off Valve: Located in the fuel line near the right rear corner of the engine. The fuel shut-off valve is used to shut off the flow of fuel when parking inside a building, during transportation to and from job sites and when the machine will not be used for a few days. Rotate valve 1/4 turn clockwise to shut fuel off. Rotate valve 1/4 turn counter-clockwise to turn fuel on.

4.11 Drive Wheel Release Lever: Located on the lower left rear corner of engine deck (See Figure 1). The drive wheel release lever is used to release the hydrostatic drive system to allow machine to be pushed while the engine is not running. Rotate lever 1/4 turn counter-clockwise to release drive system. Rotate 1/4 turn clockwise to set drive system.

NOTE: Do Not tow machine or transmission damage may result.

5. OPERATION INSTRUCTIONS

5.1 PRE-START

5.1.1 Fill fuel tank. For best results use only clean, fresh regular grade unleaded gasoline with an octane rating of 87 or higher Regular grade *leaded* gasoline may also be used; however, combustion chamber and cylinder head will require more frequent service. See Engine Owner's Manual.

Note: Fuel tank may appear loose at set-up, however, once fuel is added, tank will slowly expand to fit tank straps. Do not add oil to gasoline.

Do not overfill fuel tank. Leave room for fuel to expand.

5.1.2 Refer to the Maintenance Section, and perform all of the necessary inspection and maintenance steps.

5.2 MOWING

5.2.1 Starting Engine: Operator must be in the seat with the parking brake *engaged* and the blade clutch *disengaged*.

Open fuel shut-off value.

On a cold engine, place the throttle midway between the "SLOW" and "FAST" positions and place the choke in the "ON" position. On a warm engine, place the throttle midway between the "SLOW" and "FAST" positions and leave the choke in the "OFF" position.

Turn ignition switch to "START" position. Release the switch as soon as the engine starts.

On a cold engine, gradually return choke to the "OFF" position after engine starts and warms up.

IMPORTANT: Do not crank the engine continuously for more than ten(10) seconds at a time. If the engine does not start, allow a 60 second starter cool-down period between starting attempts. Failure to follow these guidelines can burn out the starter motor.

5.2.2 Stopping Engine: Disengage blade clutch and set parking brake. Move throttle to "SLOW" position. Allow engine to idle for 30 seconds to allow cool down. Rotate ignition switch to "OFF" position. Remove key to prevent children or other unauthorized persons from starting engine. Close fuel shut-off value when parking inside a building, during transportation to and from job sites and when the machine will not be used for a few days.

5.2.3 Engaging Electric Blade Clutch: The electric blade clutch toggle switch engages the cutting blades. Be sure that all persons are clear of mower deck and discharge area before engaging the blade clutch.

Set throttle to "midway" position. Pull outward on the toggle switch lever and flip toggle switch lever ahead to the "ON" position. Accelerate to full throttle to begin mowing.

5.2.4 Stopping Electric Blade Clutch: Flip the toggle switch rearward. This moves the toggle switch to the "OFF" position to stop the cutting blades.

5.3 TRANSPORTING

Use a heavy duty trailer to transport the machine. Lower the cutting deck and fully extend actuator.
Never transport machine with cutter deck supported by actuator.

Engage parking brake and block wheels. Securely fasten the machine to the trailer with straps, chains, cables or ropes.

Be sure that the trailer has all necessary lighting and marking as required by law and use a safety chain.

6. MAINTENANCE & ADJUSTMENTS

6.1 PERIODIC MAINTENANCE

6.1.1 Check engine oil level:

Service Interval: See Engine Owner's Manual

a) Make sure engine is stopped and on a level surface.

b) Check with engine cold.

c) Clean area around dipstick. Remove dipstick and wipe oil off. Reinsert the dipstick and push it all the way into the tube, *but do not screw in*. Remove dipstick and check level.

d) For further procedures, see Engine Owner's Manual.

6.1.2 Clean engine air cooling system:

Service Interval: See Engine Owner's Manual

a) Stop engine and remove ignition key.

b) Clean all debris from engine air intake screen and from around engine shrouding.

6.1.3 Clean transmission cooling compartment:

Service Interval: Daily

a) Stop engine and remove ignition key.

b) Clean all debris from screens that encompass cooling compartment, and then remove the compartment screen.

c) Clean all debris from the fan blades and the cooling fins for the transmission.

d) Replace the compartment screen.

6.1.4 Clean grass build-up under deck and check mower blades.

Service Interval: Daily

⚠ CAUTION

- **When it is necessary to raise the deck or mower for service or maintenance, *DO NOT* rely solely on mechanical or hydraulic jacks for support. Use adequate jack stands or equivalent support.**

a) Disengage electric blade clutch.

b) Stop engine and remove ignition key.

c) Raise deck and block up using proper safety precautions.

d) Clean out any grass build-up from underside of deck and in deck discharge chute.

e) Inspect blades and sharpen or replace as required.

f) If blade removal is necessary, be careful for the sharp cutting edges of the blades.

g) Re-install the blades (if they were removed) and torque blade bolts to 75-80 ft.lbs. Be sure the spring disk washer cone is installed toward the bolt head (See Figure 4).

h) Remove jack stands (or equivalent support) and lower deck to ground.

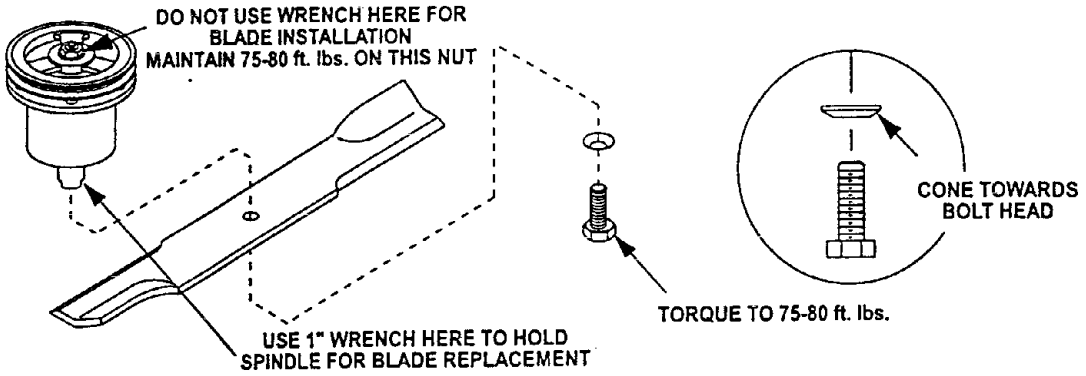

FIG. 4
BLADE BOLT INSTALLATION

6.1.5 Check safety interlock system:

Service Interval: Daily

a) Check starting circuit. Starter ***should crank*** with operator *in* seat; parking brake *engaged*, and with electric blade clutch *disengaged*. Try to start with operator *out* of seat; parking brake *engaged*, and electric blade clutch *disengaged*; starter ***must not*** crank.

   Try to start with operator *in* seat, parking brake *disengaged* and electric blade clutch *disengaged*; starter ***must not*** crank.

   Try to start with operator *in* seat, parking brake *engaged* and electric blade clutch *engaged*; starter ***must not*** crank.

b) Check operator presence control (OPC) circuits: Run engine at one-third throttle with *blade clutch* and *parking brake disengaged*; lift yourself off the seat (but do not get off the machine) engine must stop after 1/2 second has elapsed.

c) Run engine at one-third throttle with *blade clutch* and *parking brake engaged*; lift yourself off the seat (but do not get off the machine) engine must stop after 1/2 second has elapsed.

d) If machine does not pass any of these tests, **Do Not** operate. Contact your authorized EXMARK Servicing Dealer or Distributor.

⚠ CAUTION

- **It is essential that all Operator Safety Mechanisms be connected and in proper working condition prior to use for mowing.**

6.1.6 Check for loose hardware:

Service Interval: Daily

a) Stop engine and remove ignition key.

b) Visually inspect machine for any loose hardware or any other possible problem. Tighten hardware

or correct the problem before operating.

6.1.7 Service pre-cleaner element and air cleaner:

Service Interval: See Engine Owner's Manual

a) Stop engine and remove key.

b) Refer to Engine Owner's Manual for cleaning.

⚠ CAUTION

- **Never do maintenance or repairs near a hot engine. Always allow engine time to cool down.**

6.1.8 Change engine oil:

Service Interval: Refer To Engine Operator's Manual

NOTE: Change oil after first five (5) hours of operation, then refer to engine manual for future oil change frequencies.

a) Disengage electric blade clutch.

b) Raise cutter deck so as to tilt the engine for draining.

c) Stop engine and remove ignition key.

d) Drain oil while engine is warm from operation.

e) Remove the oil drain plug from the rear of the engine. Allow oil to drain then replace drain plug.

f) Lower cutter deck so that engine deck is level.

g) Replace the oil filter as per Engine Owner's Manual. Clean around oil filter and unscrew filter to remove. Before reinstalling new filter, apply a thin coating of oil on the surface of the rubber seal.

Turn filter clockwise until rubber seal contacts the filter adapter then tighten filter an additional 2/3 to 3/4 turn.

h) Clean around oil fill cap and remove cap. Fill to specified capacity and replace cap. Use oil as directed in Engine Owner's Manual. Do Not overfill.

i) Start the engine and check for leaks. Stop engine and recheck oil level.

6.1.9 Check hydraulic oil level:

Service Interval: 25 hrs.

a) Make sure mower is on a level surface.

b) Stop engine and remove ignition key.

c) Visually inspect the sight gauge on hydraulic tank. Oil level should be visible to top of sight gauge. If not, clean area around hydraulic reservoir cap, remove cap, and add oil as specified in Section 2.7 (Specifications). Replace cap.

⚠ CAUTION

- Safely relieve all pressure in the system before disconnecting lines or before performing any work the system.

⚠ CAUTION

- Keep body and hands away from pin holes or nozzles that eject hydraulic fluid under high pressure. Use paper or cardboard, *NOT HANDS* to search for leaks.

⚠ CAUTION

- Hydraulic fluid escaping under pressure may have sufficient force to penetrate skin and cause serious injury. If foreign fluid is injected into the skin, it must be surgically removed within a few hours by a doctor familiar with this type of injury or gangrene may result.

6.1.10 Check tire pressures:

Service Interval: 25 hrs.

a) Stop engine and remove ignition key.

b) Inflate tires to pressures specified in Section 2.8 (Specifications).

c) See Section 7.1 for further information.

6.1.11 Check battery electrolyte level:

Service Interval: 25 hrs.

a) Stop engine and remove ignition key.

b) Remove battery cover.

c) Remove vent caps from battery. If needed, fill with water (distilled is recommended) to bottom of vent wells and replace vent caps.

d) See Section 3.7 (Assembly) for servicing a new battery.

⚠ WARNING $13747

BATTERY CONTAINS SULFURIC ACID, AVOID CONTACT AND ALWAYS SHIELD EYES, FACE, SKIN AND CLOTHING FROM BATTERY. CIGARETTES, FLAMES OR SPARKS COULD CAUSE BATTERY TO EXPLODE. DO NOT CHARGE OR USE BOOSTER CABLES OR ADJUST POST CONNECTIONS WITHOUT PROPER TRAINING. IN EVENT OF AN ACCIDENT FLUSH WITH WATER AND CALL A PHYSICIAN IMMEDIATELY. KEEP OUT OF REACH OF CHILDREN.

6.1.12 Inspect Belt Wear:

Service Interval: 25 hrs.

a) Stop engine and remove ignition key.

b) Remove the three cutter deck belt shields to check mower primary and secondary belt condition.

c) Look under engine deck to check the transmission drive belt condition.

d) Check all idler arms to be sure they pivot freely.

Note: Be sure to check idler on transmission drive belt. Disassemble, clean and grease pivot bushing if necessary.

6.1.13 Lubricate grease fittings.

a) Stop engine and remove ignition key.

b) Lubricate fittings with one to two pumps of SAE No. 2 multi-purpose gun grease (see recommended lubricants following the lubrication chart.
Refer to the following chart for fitting locations and lubrication schedule.

LUBRICATION CHART

FITTING LOCATIONS	INITIAL PUMPS	NO of PLACES	SERVICE INTERVAL
1. Front Caster Wheel Bearings	12	2	Daily
2. Front Caster Spindles	2	2	Daily
3. Cutter Housing Spindles	10	3	†Weekly
4. Drive Wheel Bearings	1	2	Monthly
5. Engine Deck Pivots	1	2	Weekly
6. Steering Column	1	1	Weekly
7. Idler Pivots, Mower Deck	1	2	Weekly
8. Rear Caster Wheel Bearings	1	1	Monthly

† Under severe cutting conditions, two pumps of grease twice weekly may be more beneficial.

Recommended SAE No. 2 Greases:

Pennzoil #705; Pennzoil #707L; Pennzoil #TTM 302

Mobil Grease CM-P; Mobilith SHC220;
Mobil Grease Special; Mobilith SHC460
(Available at Mobil Stations)

Ronex MP - (Available at Exxon Stations)

Shell Alvania #2 - (Available at Shell Stations)

Super Lube M EP #2 or Super Stay M #2
(Available at Conoco Stations)

d) Lubricate all control linkages, pivot points, etc., with engine oil or other special lubricant every 25 hours, or more often when operating in severe conditions.

6.1.14 Remove engine shrouds and clean cooling fins:

Service Interval: See Engine Owner's Manual

a) Stop engine and remove ignition key.

b) Remove cooling shrouds from engine and clean cooling fins. Also clean dust, dirt and oil from external surfaces of engine which can cause improper cooling.

c) Make sure cooling shrouds are properly reinstalled. Operating the engine without cooling shrouds will cause engine damage due to overheating.

6.1.15 Change fuel filter:

Service Interval: As Required

a) A fuel filter is installed in the fuel line between the fuel tank and the engine. Replace when necessary

6.1.16 Lubrication of steering yoke pivot:

Service Interval: Monthly

a) The steering yoke pivot is permanently sealed and should require no additional lubrication. If there is evidence of seal leakage, replace the seals or bearings and fill with SAE No. 2 multi-purpose grease or wheel bearing grease.

6.1.16 Check spark plugs.

Service Interval: 100 hrs.

a) Remove spark plugs, check condition and adjust plug gap, or replace with new plugs. See Engine Owners Manual.

6.1.18 Change hydraulic system oil and filter:

Service Interval: After first 150 hrs, then each 500 hrs. thereafter.

a) Stop engine and remove key.

b) Carefully clean area around small fitting under oil reservoir. Loosen clamp, remove hose and allow oil to drain from reservoir. It is important that no dirt or contamination enters the hydraulic system. Reinstall hose and tighten clamp.

c) Carefully clean area around filter. It is important that no dirt or contamination enters the hydraulic system.

d) Unscrew filter and remove. Before reinstalling new filter, apply a thin coat of oil on the surface of the rubber seal. Turn filter clockwise until rubber seal contacts the filter adapter, then tighten the filter an additional 2/3 to 3/4 turn. Use only Exmark (Part No. 513211) or Eaton (Part No. 103144) filter elements.

e) Clean around reservoir cap and Refill reservoir to top of sight gauge with Mobil DTE 26 or equivalent.

f) Start engine and run several minutes.

g) Recheck hydraulic oil level as outlined in 6.1.9.

6.1.19 Inspect Electric clutch gap:

Service Interval: 250 hrs.

Refer to Section 6.2.12 for inspection and adjustment procedures.

6.1.20 Refer to the Engine Owner's Manual for detailed maintenance required for servicing the engine.

6.1.21 Wheel hub, slotted nut torque specification.

a) Tighten the slotted nut on the transaxle tapered shaft and torque to 100 ft.lbs.

b) After proper torque has been applied, turn the nut until the next set of slots lines up with the cross hole in the shaft.

c) Replace cotter pin.

d) To aid in wheel hub removal, it is recommended that an antisieze compound be used on the tapered shaft of the wheel motor.

6.1.22 Thread locking adhesives such as "Loctite 242" or "Fel-Pro Pro-Lock, Nut-Type" are used on the following fasteners:

a) Bolt which mounts blade drive clutch to engine crankshaft.

b) Transaxle drive shaft pillow block bearing setscrews.

c) Bolts which attach transaxle to lower stabilizer bracket.

6.1.23 An anti-seize compound is used on tapered shaft of wheel hub mounts.

6.1.24 Dielectric grease is used on all blade type electrical connections to prevent corrosion and loss of contact.

6.2 ADJUSTMENTS

⚠ CAUTION

- **Disengage blade clutch, shut off engine and remove key before servicing, cleaning or making any adjustments.**

6.2.1 Cutting height and anti-scalp roller adjustment.

a) Install hairpin clips in the holes shown in sketch below for the desired cutting height (See Figure 4).

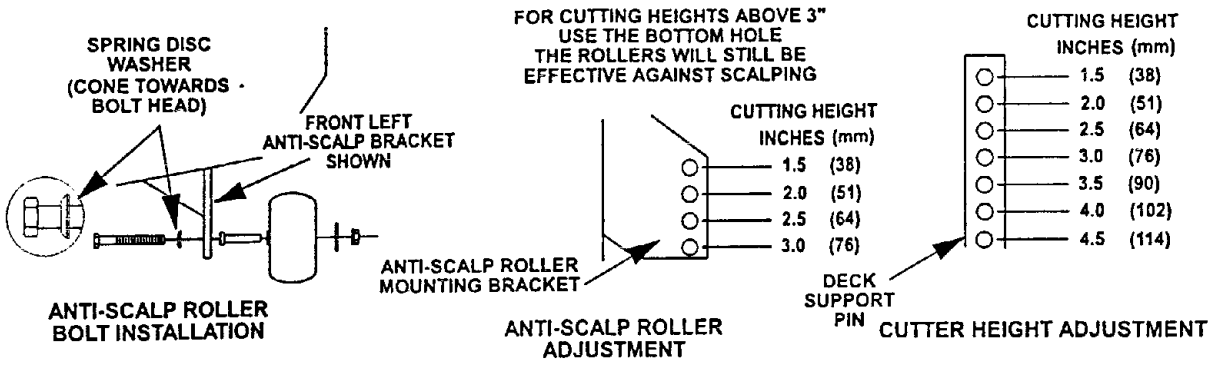

FIG 5

CUTTING HEIGHT ADJUSTMENT

ANTI-SCALP ROLLER ADJUSTMENT

b) For maximum deck flotation, rollers should maintain 1/4 in. (6.4 mm) clearance to ground. Do Not adjust rollers to support the deck. Be sure roller bolts are tight or loss of roller may result.

c) When operating in extremely rough conditions it may be necessary to position the anti-scalp rollers one or two holes higher than described in "b" to prevent damage to the rollers and/or bolt failure (See Figure 5).

NOTE: When anti-scalp rollers are placed in these positions, reduced deck floatation will result.

6.2.2 Transmission drive belt tension adjustment:

No adjustment necessary.

6.2.3 Cutter deck drive belt: No adjustment necessary.

6.2.4 Blade drive belt tension. No adjustment necessary.

6.2.5 Neutral Centering Adjustment

a) The Neutral Centering Device adjustment should be made with the engine running at full throttle. First raise and securely block up the frame so that the drive wheels can rotate freely without contacting the ground.

⚠ CAUTION

- **When it is necessary to raise the deck or mower for service or maintenance, DO NOT rely solely on hydraulic or mechanical jacks for support. Use adequate jack stands or equivalent support.**

b) Remove the electrical connection from the parking brake safety switch located on the right- hand underside at the front of the engine deck. Temporarily install a jumper wire across the terminals in the connector of the wiring harness.

c) Release brake lever.

d) The Neutral Centering Device is located on the right-hand underside of the engine deck. Loosen jam nut (d) from the ball joint which connects the override assembly (f), to the

engine deck anchor mounting (See Figure 6).

e) Start engine. Operator must be in seat to crank engine. Open to full throttle.

f) Adjust neutral centering device length by rotating the neutral centering device barrel clockwise or counterclockwise until wheels stop turning or no longer creep. Tighten jam nut.

g) Remove jumper and reconnect electrical connection to parking brake safety switch.

h) Check safety interlock system as outlined in Section 6.1.5.

⚠ CAUTION

- **Keep clear of wheels and other moving parts when making these adjustments.**

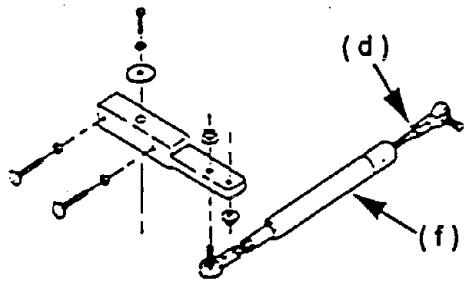

FIG. 6
NEUTRAL CENTERING DEVICE ADJUSTMENT

6.2.6 Parking Brake Quadrant Adjustment

a) Loosen the two 5/16 x 18 screws (a),that clamp the brake quadrant to the engine deck.

b) Pull parking brake lever towards the operator to the brake "on" position (b).

c) Check linkage to ensure that they butt up against the over-centering stop bolt (c), and retighten the two 5/16-18 screws (See Figure 7).

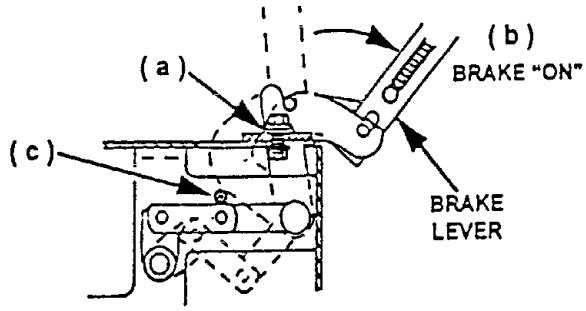

FIG. 7
PARKING BRAKE QUADRANT ADJUSTMENT

6.2.7 Parking Brake Spring Adjustment

a) Check the pin to pin length and adjust to 11 5/8" as required.

b) Check the compression spring length and

adjust to 3 1/32" as required (See Figure 8).

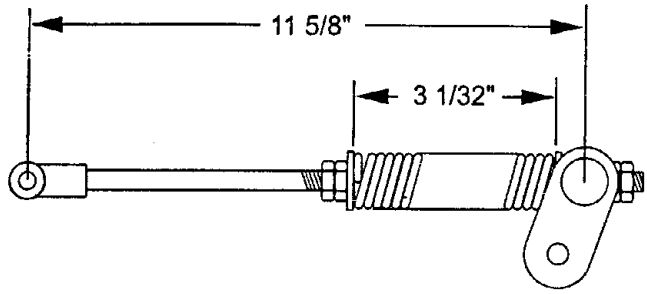

FIG. 8
BRAKE CONTROL LINK AND SPRING ADJUSTMENT

6.2.8 Parking Brake Neutral Lockout Adjustment.

⚠ CAUTION

- **Stop engine and remove ignition key.**

a) Remove inlet screen and fan.

b) Engage parking brake. Loosen the jam nuts securing the two 5/16 x 1-1/2" carriage bolts to the hydro control arm. Be sure the hydro control arm is in the neutral position as outlined in the previous adjustment (6.2.5) and the parking brake as adjusted previous adjustment (6.2.6).

c) Adjust two 5/16 x 1-1/2" carriage bolts in the hydro control arm in or out until the head contacts the butterfly plate, and then tighten jam nuts (See Figure 9).

NOTE: When the bolts are properly adjusted, there will be no rotational movement of the hydro control arm when brake is engaged.

d) Restart engine and open to full throttle.

e) Step down on the forward pedal, then the rear pedal of the motion control pedal. Listen for a "whine" from the hydro transaxle. If any "whine" is heard during any of the above conditions, repeat adjustment steps "b", "c" and "d".

f) Replace fan and inlet screen

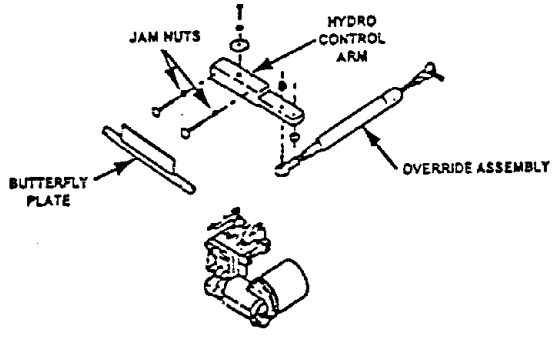

FIG. 9
PARKING BRAKE NEUTRAL LOCKOUT ADJUSTMENT

6.2.9 Parking brake switch adjustment

a) Stop engine and remove ignition key.

b) Engage parking brake. Adjust the parking brake switch mounting bracket until jack- shaft engagement arm depresses brake safety switch by at least 1/4".

c) Check safety interlock system as outlined in 6.1.5.

6.2.10 Motion Control Linkage Adjustment

a) Step down on the forward pedal until it touches the foot rest.

b) Check the gap between the motion override tube and the spacer. This gap should measure 1/16" (See Figure 10).

c) If adjustment is required, remove clevis pin at foot pedal end and turn yoke in or out as required to obtain the 1/16" gap.

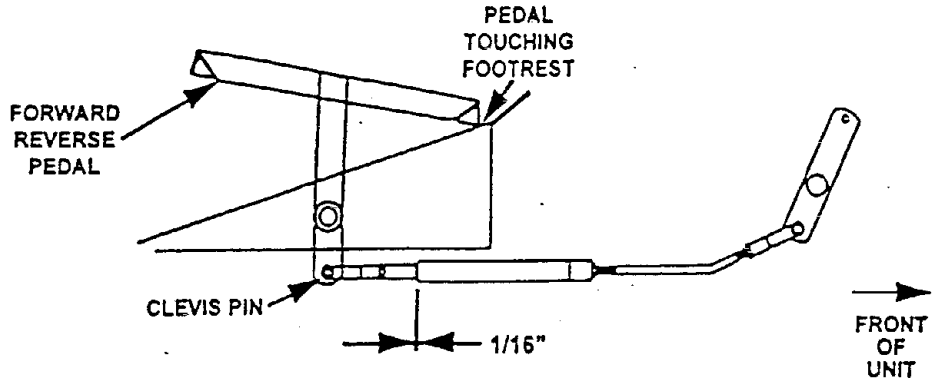

FIG. 10
MOTION CONTROL LINKAGE ADJUSTMENT

6.2.11 Seat Switch Adjustment

a) With operator out of seat, adjust the seat switch to provide a 1/16" clearance between the switch plunger and the seat frame (See Figure 11).

b) To adjust, loosen the top nut securing the seat switch to the seat rail weldment. Adjust the bottom nut until the 1/16" between plunger and seat frame has been obtained. Tighten the top nut. Recheck the measurement and adjust again if necessary.

c) Check safety interlock system as outlined in 6.1.5.

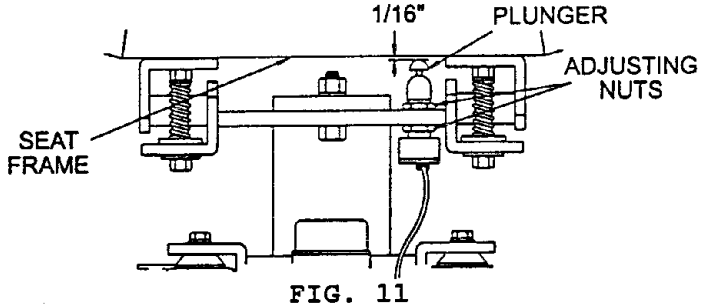

FIG. 11
SEAT SWITCH ADJUSTMENT

6.2.12 Electric Clutch Adjustment

a) Stop engine and remove ignition key.

b) Engage parking brake.

c) Place .015-.021 inch feeler gauge through each of the three clutch gap holes. If gap exceeds this range, tighten the three adjusting nuts(C) until the proper gap is obtained (See Figure 12). The three clutch gap holes are located at the "nut side" of the adjusting bolts. The adjusting bolts can be identified by the springs surrounding each bolt.

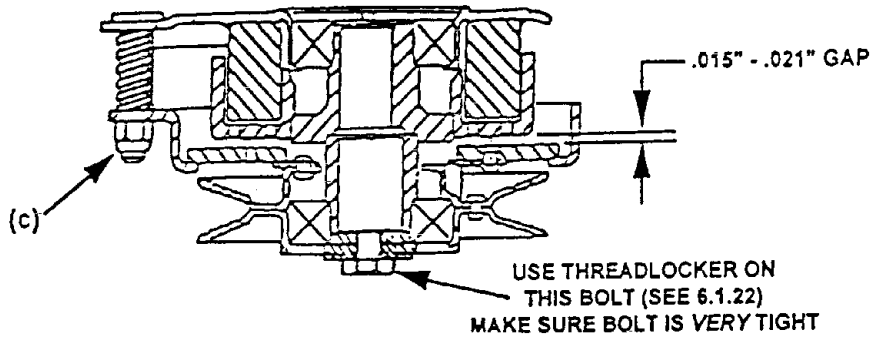

FIG. 12
ELECTRIC CLUTCH ADJUSTMENT

6.2.13 Steering Chain Adjustment

a) Position the steering handle bar so that it points the unit straight forward (the rear steering wheel should be in line with the rider main frame channel).

b) Check to see if the chains are loose.

c) To take up slack in the chains, loosen the rear jam nuts connecting the eyebolts to cross link bars, then equally tighten each forward jam nut until slack is taken up. Retighten the forward jam nuts onto the links.

d) If the unit tends to turn left when handle bar is positioned for straight forward travel, adjust by shortening the right hand link (threading jam nuts *closer* to "eye" end of the eyebolt) and lengthening the left hand link (threading jam nuts *away* from the "eye" end of the eyebolt) an equal amount. Re check chain tension.

e) If the unit tends to turn right when handle bar is positioned for straight forward travel, reverse procedure as stated in paragraph "d" above.

6.2.14 Throttle Control Adjustment

Loosen the cable clamp on the engine and position the throttle control at the control console within 1/8" from the upper end of the slot. Pull on cable assembly at lower end, where it attached to the engine, until the throttle control arm contacts the stop screw. Secure cable with cable clamp.

6.2.15 Throttle Cable Tension

Tension in throttle lever can be adjusted by adjusting the tightness of the lever pivot bolt, which is located under the console.

7. TROUBLE SHOOTING

7.1 MOWER CUTS UNEVENLY.

a) Check air pressure in tires; 20 psi/drive, 22 psi/ pneumatic casters.

A more uniform cutting height may be obtained with higher tire pressure on rough terrain.

A lower tire pressure provides more flotation.

b) Check deck support pins.

c) Hairpin clips must be in the same hole on each support pin.

d) Check blades tip to tip for straightness.

e) Blades should be within 3/16" or one blade width from being in line.

7.2 ENGINE WILL NOT START.

a) Check that throttle control is midway between "slow" and "fast" positions, and choke is in "on" position for a cold engine or "off" position for a warm engine.

b) Be sure there is fuel in the tank and that the fuel valve is open.

c) Operator must be in the seat.

d) Check that parking brake is set.

e) Be sure that the blades are disengaged.

f) Check that the spark plug wires are properly connected.

g) Look for loose or faulty wiring connections.

h) Check for corrosion at all wiring connections. Even minor corrosion may cause a faulty connection. Clean connector terminals thoroughly and reconnect.

I) Check that the seat switch is properly adjusted. See Section 6.2.11.

j) Check that the parking brake switch is properly adjusted. See Section 6.2.9.

NOTE: After carefully checking the above steps, attempt to start the engine. If it does not start, contact your authorized Exmark service dealer or distributor.

⚠ CAUTION

- **It is essential that all Operator Safety Mechanisms be connected and in proper operating conditions prior to the use of the mower.**

⚠ CAUTION

- **When checking starting problems, be sure to keep body, hands and clothes away from areas where moving parts can suddenly engage.**

ENGINE TROUBLESHOOTING

When a problem occurs, do not overlook the simple causes. For example, starting problems could be caused by an empty fuel tank. The following tables list some common causes of troubles.

Do not attempt to service or replace major items or any items that call for special timing or adjustment procedures (governor, valves, etc.). Have this work done by your Engine Service Dealer.

ENGINE TROUBLESHOOTING TABLE

PROBLEM	NO FUEL	IMPROPER FUEL	DIRT IN FUEL LINE	DIRTY AIR FILTER	FAULTY SPARK PLUG	ENGINE OVERLOADED	BLOCKED FUEL FILTER	INCORRECT OIL LEVEL	DIRTY AIR SCREEN
Will not start	X		X	X	X	X	X		
Hard starting	X	X	X	X	X	X	X		
Stops suddenly	X		X	X		X	X	X	X
Lacks power		X	X	X	X	X	X	X	X
Operates erratically		X	X	X	X	X	X		X
Knocks or pings		X				X			X
Skips or misfires		X	X	X	X				X
Backfires			X	X	X	X			X
Overheats			X	X		X		X	X
High fuel consumption				X	X	X			X

8. WIRING DIAGRAMS

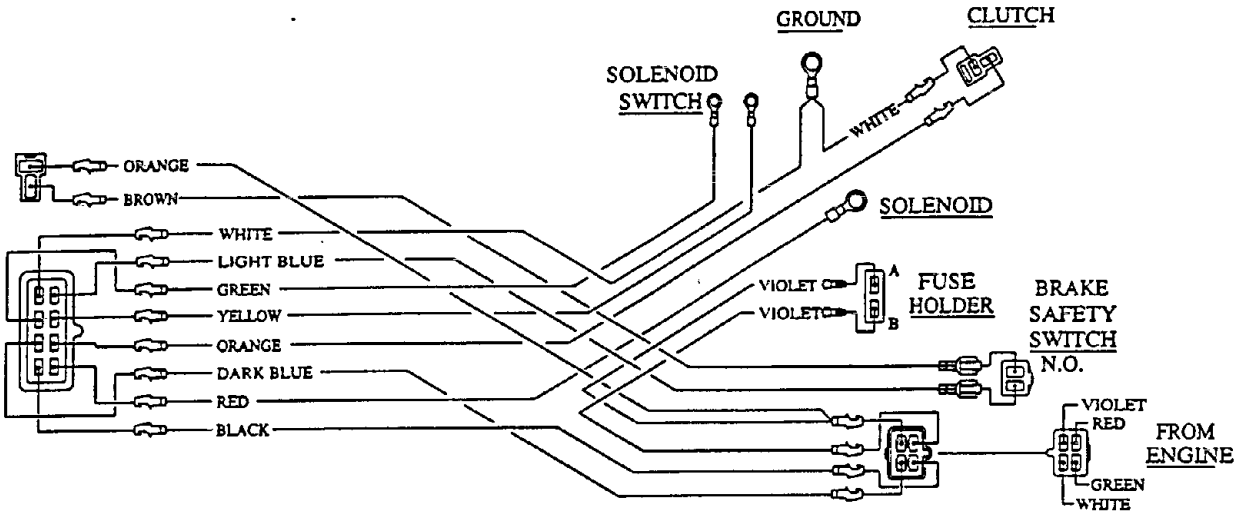

Engine Deck Wiring Diagram
Note: All connectors are viewed from the wire input side of the connector.
N.O. = Normally Open

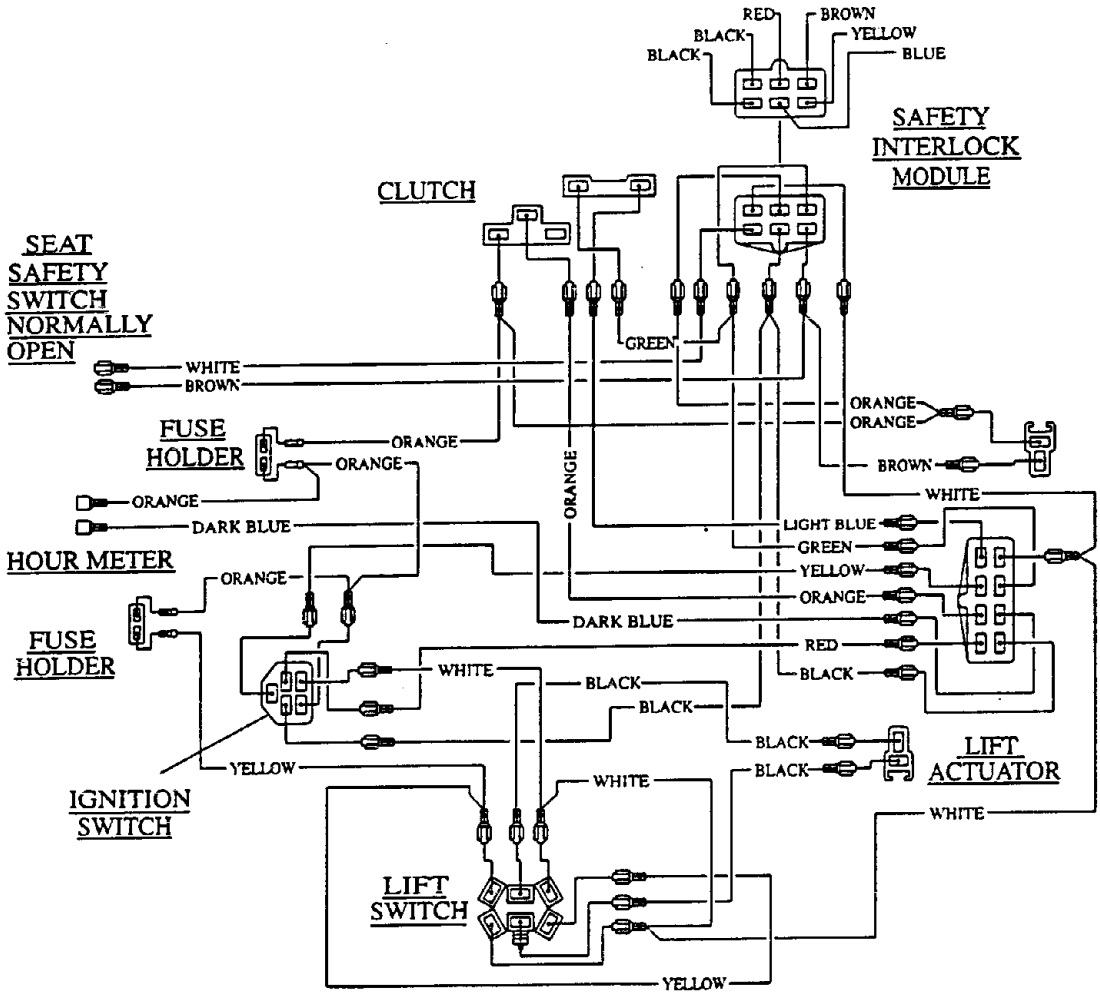

Console Wiring Diagram
Note: All connectors are viewed from the wire input side of the connector.
N.O. = Normally Open

9. WARRANTY

Limited Warranty Exmark Commercial Turf Equipment Exmark Mfg. Co. Inc. ("Exmark") warrants on the terms and conditions herein, that it will repair, replace or adjust any part manufactured by Exmark and found by Exmark(in the exercise of its reasonable discretion)to be defective in factory material or workmanship.

This warranty is limited to one year from the date of original retail purchase (90 days for rental use) for any Exmark mower that is used for commercial or any other income producing purpose. The hydrostatic traction drive system will be warranted for two full years from date of original retail purchase against defects in materials or workmanship excluding hoses. Exmark Mfg will extend the Peerless 5-speed transmission manufacturer's warranty from 90 days to one year. Belts and tires are warranted for 90 days against defects in materials or workmanship.

The engine warranty is covered by its respective engine manufacturer. Please refer to the engine manufacturers warranty statement that is included in the literature packet. Exmark is not authorized to handle warranty adjustments on engines. Engine warranties should be referred to the nearest authorized service outlet of the engine manufacturer.

This warranty extends only to the original retail purchaser of the equipment. The warranty may not be assigned or transferred without the prior express written consent of Exmark. The warranty commences upon the date of the original retail purchase.

The Exmark turf equipment, including any defective part, must be returned to an authorized Exmark service dealer within the warranty period. The warranty shall extend to cost to repair or replace(as determined by Exmark) the defective part, including labor. The expense of delivering the mower to the dealer for warranty work and the expense of returning it back to the owner after repair or replacement will be paid for by the owner. Exmark's responsibility in respect to claims is limited to making the required repairs or replacements, and no claim of breach of warranty shall be cause for cancellation or rescission of the contract of sale of any Exmark mower. Proof of purchase may be required by the dealer to substantiate any warranty claim. All warranty work must be performed by an authorized Exmark service dealer.

This warranty extends only to turf equipment operated under normal conditions and properly serviced and maintained. The warranty expressly does not cover: (i) any defects, damage or deterioration due to normal use, wear and tear, or exposure; (ii) normal maintenance services, such as oil change, cleaning, lubrication, adjustment; (iii) replacement of service items, such as oil, lubricants, spark plugs, belts, rubber hoses or other items subject to normal service replacement; (iv) damage or defects arising out of or relating to misuse, neglect, alteration, negligence or accident; (v) repair or replacement arising from operation of or use of the turf equipment which is not in accordance with operating instructions as specified in the operator's manual or other operational instructions provided by Exmark; (vi) repair or replacement arising as a result of any operation from turf equipment that has been altered or modified so as to, in the determination of Exmark, adversely affect the operation, performance or durability of the equipment or that has altered, modified or affected the turf equipment so as to change the intended

use of the product; (vii) repair or replacement necessitated by use of parts, accessories or supplies, including gasoline, oil or lubricants, incompatible with the turf equipment or other than as recommended in the operator's manual or other operational instructions provided by Exmark; (viii) repairs or replacements resulting from parts or accessories which have adversely affected the operation, performance or durability of the turf equipment; or (ix) damage or defects due to or arising out of repair of turf equipment by person or persons other than an authorized Exmark service dealer or the installation of parts other than genuine Exmark or Exmark recommended parts.

As a condition to this warranty, customer shall have read the operator's manual and shall have returned to Exmark, within the prescribed time, the enclosed warranty registration card.

The sole liability of Exmark with respect to this warranty shall be repair and replacement as set forth herein. Exmark shall have no liability for any other cost, loss or damage, including but not limited to, any incidental or consequential loss or damage. In particular, Exmark shall have no liability or responsibility for: (i) expenses relating to gasoline, oil or lubricants; (ii) loss, cost or expense relating to transportation or delivery of turf equipment from the location of owner or location where used by owner to or from any authorized Exmark service dealer; (iii) travel time, overtime, after hours time or other extraordinary repair charges or charge relating to repairs or replacements outside of normal business hours at the place of business of the authorized Exmark service dealer; (iv) rental of like or similar replacement equipment during the period of any warranty, repair or replacement work; (v) any telephone or telegram charges or travel charges; (vi) loss or damage to person or property other than that covered by the terms of this warranty; (vii) any claims for lost revenue, lost profit or additional cost as a result of a claim of breach of warranty; or (viii) attorney's fees.

There are no representations or warranties which have been authorized and provided to the buyer of the turf equipment, other than as set forth in this warranty. Any and all statements or representations made by any seller of this equipment, including those set forth in any sales literature or made orally by any sales representative, are superseded by the terms of this warranty. Any affirmation of fact or promise made by Exmark or any of its representatives to the buyer which relates to the goods that are the subject of this warranty shall not be regarded as part of the basis of the bargain and shall not be deemed to create any express warranty that such goods shall conform to the affirmation or promise.

THERE ARE NO UNDERSTANDINGS, AGREEMENTS, REPRESENTATIONS, OR WARRANTIES, EXPRESS OR IMPLIED (INCLUDING BUT NOT LIMITED TO ANY REGARDING THE MERCHANTABILITY OR FITNESS FOR A PARTICULAR PURPOSE), NOT SPECIFIED HEREIN, RESPECTING THE EQUIPMENT WHICH IS THE SUBJECT OF THIS WARRANTY.

This warranty applies to all Exmark turf equipment sold in the United States and Canada and intended to be used for commercial purposes.

SERVICE RECORD

Date	Description of Work Done	Service Done By

SEE EXMARK'S COMPLETE LINE OF PRODUCTS FOR TURF CARE

LAZER Z

EXPLORER

TURF RANGER

TURF TRACER

TURF TRACER HP

VIKING 5-SPEED

VIKING HYDRO

METRO

SELF STEERING SULKY

GRASS CATCHER

MICRO-MULCHING ACCESSORY

EXMARK MFG. CO. INC.
INDUSTRIAL PARK BOX 808
BEATRICE, NE. 68310

PART NO. 850445
(402) 223-4010
FAX (402) 223-4154

ALL RIGHTS RESERVED

PRINTED IN U.S.A.

exmark MFG. CO. INC.