For Serial Nos.
440,000 & Higher

OPERATOR'S MANUAL

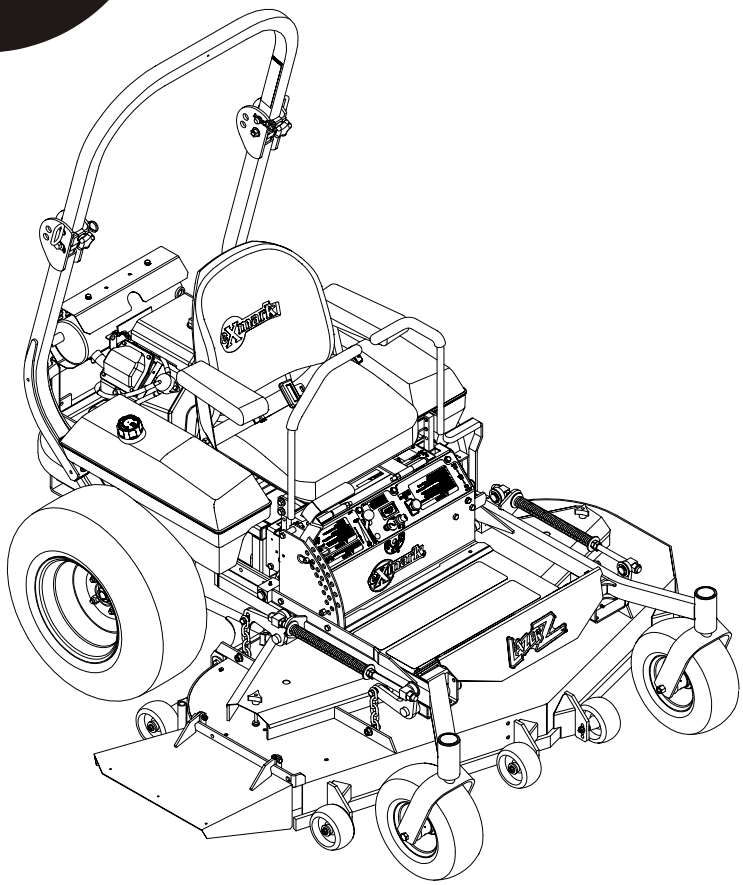

LAZER Z®

ADVANTAGE SERIES MODELS

CONGRATULATIONS on the purchase of your new Exmark mower. This product has been carefully designed and manufactured to give you a maximum amount of dependability and years of trouble-free operation. If additional information is needed, or should you require trained mechanic service, contact your authorized Exmark equipment dealer or distributor. If you need to order replacement parts from your dealer, always give the model number and serial number of your mower as well as the part number, description and quantity of the part needed.

The Serial No. plate is located on the right side of the console. For ease of ordering and reference, we suggest that you record the information requested in the following identification table.

Place Model No. and Serial No. Label Here
(Included in Literature Pack)
or Fill in Below

Model No. _____

Serial No. _____

Engine Model No. and Spec. No. (Code) _____

Engine Serial No. (E/No) _____

Date Purchased _____

Part No. 103-5503 Rev. A

⚠ WARNING

POTENTIAL HAZARD

- This product is a piece of power equipment.

WHAT CAN HAPPEN

- Failure to follow safe operating practices can result in serious operator injury or even death.

HOW TO AVOID THE HAZARD

- Keep all shields, guards, and safety devices (especially the grass discharge system) in place and in proper working condition.
- Stop engine and wait for all moving parts to stop. Remove spark plug wire(s) or remove key before adjusting, servicing, or performing maintenance.
- If mower deck becomes clogged, stop engine and wait for all moving parts to stop. Remove spark plug wire(s) or remove key before cleaning blockage.
- Keep hands, feet, and clothing away from power driven parts.
- Keep off mower unless seat platform is provided.
- Keep others off mower.

⚠ WARNING

POTENTIAL HAZARD

- Gasoline is harmful or fatal if swallowed. Long-term exposure to vapors has caused cancer in laboratory animals.

WHAT CAN HAPPEN

- Failure to use caution may cause serious injury or illness.

HOW TO AVOID THE HAZARD

- Avoid prolonged breathing of vapors.
- Keep face away from nozzle and gas tank/container opening.
- Keep away from eyes and skin.
- Never siphon by mouth.

IMPORTANT

When the mower is used or operated on any California forest, brush or grass covered land, a working spark arrester must be attached to the muffler. If not, the operator is violating state law, Section 4442 Public Resource Code. To acquire a spark arrester for your unit, see your Engine Service Dealer.

This spark ignition system complies with Canadian ICES-002
Ce système d'allumage par ètincelle de vèhicule est conforme à la norme NMB-002 du Canada

The enclosed Engine Owner's Manual is supplied for information regarding The U.S. Environmental Protection Agency (EPA) and the California Emission Control Regulation of emission systems, maintenance and warranty.

Keep this engine Owner's Manual with your unit. Should this engine Owner's Manual become damaged or illegible, replace immediately. Replacements may be ordered through the engine manufacturer.

Exmark reserves the right to make changes or add improvements to its products at any time without incurring any obligation to make such changes to products manufactured previously. Exmark, or its distributors and dealers, accept no responsibility for variations which may be evident in the actual specifications of its products and the statements and descriptions contained in this publication.

EXMARK PARTS PLUS® PROGRAM

EFFECTIVE DATE: September 1, 1995

Program

If your Exmark dealer does not have the Exmark part in stock, Exmark will get the parts to the dealer the next business day or the part will be FREE* Guaranteed!!

How the Program Works

1. If dealer does not have part in stock for a "down" unit at the time of request by customer, the dealer contacts his distributor by 1:00 p.m., local time, and requests Exmark Parts Plus® shipment of six (6) line items or less.

2. Distributor ships part(s) to dealer or customer, as requested by dealer, same day, overnight UPS Distributor bills dealer for part and freight charges where applicable.

3. If distributor does not have the part(s) in stock to satisfy Exmark Parts Plus® order, he contacts Exmark by 3:00 p.m., central time, with an Exmark Parts Plus® order of six (6) line items or less.

4. If order is received by 3:00 p.m. central time, Exmark ships part(s) direct to dealer or customer, as requested by distributor, same day, overnight UPS, Exmark bills the distributor for parts and shipping charges, where applicable.

5. The customer pays for the <u>part</u> and <u>freight</u> if it is shipped under the Exmark Parts Plus® and if it arrives in accordance to the program.

6. Who pays for the <u>part</u> and <u>freight</u> if it fails to arrive overnight in accordance to the program?

   A. Under any circumstance the customer does not pay.

   B. If the part does not arrive overnight due to:

      1. The dealer not submitting the Exmark Parts Plus® order to his Exmark distributor by 1:00 p.m., the dealer pays for the part and freight.

      2. The Distributor being unable to ship the part the same day or not submitting the Exmark Parts Plus® order to Exmark by 3:00 p.m., central time, the Distributor pays for the part and freight.

      3. Exmark being unable to ship the part and the Exmark parts order is received by 3:00 p.m., central time, Exmark pays for the part and freight.

      4. If the part does not arrive overnight due to the shipper (UPS), the shipper pays for the freight and Exmark pays for the part.

<u>The following restrictions apply</u> -- The Exmark Parts Plus® Program is available only through participating Exmark Dealers and applies only to orders submitted on this program Monday through Thursday. Parts Plus service is available only in the 48 contiguous United States. UPS has initiated a Saturday delivery program to many areas of the continental United States and can be requested for an overnight shipment on Friday to be delivered Saturday. The next day air charge, plus the Saturday delivery fee will be the responsibility of the purchaser. Exmark Mfg. will assume no responsibility for Saturday delivery shipments. To qualify, all Exmark Parts Plus® orders must be received by Exmark by 3:00 p.m., central time. Orders must be six (6) line items or less. Exclusions from the Exmark Parts Plus® Program are: Any wholegood or accessory in its entirety, engines and engine replacement parts, 5-speed Peerless transmissions and 5-speed transaxles, hydraulic or hydrostatic wheel motors, cutter decks and engine decks or any item exceeding United Parcel Service size and weight restrictions.

Due to UPS restrictions, aerosol spray paint is considered a hazardous material and cannot be shipped via UPS next day or Second Day Air.

Exmark Manufacturing stocks a limited supply of parts for transaxles, pumps and wheel motors. These parts can be ordered for Next Day Air shipment but will not be guaranteed per the Parts Plus Program.

CONGRATULATIONS on the purchase of your Exmark Mower. This product has been carefully designed and manufactured to give you a maximum amount of dependability and years of trouble-free operation.

OPERATOR'S MANUAL

This manual contains assembly, operating, maintenance, adjustment, and safety instructions for your Exmark mower.

BEFORE OPERATING YOUR MOWER,
CAREFULLY READ THIS MANUAL IN ITS ENTIRETY.

By following the operating, maintenance, and safety instructions, you will prolong the life of your mower, maintain its maximum efficiency, and promote safe operation.

If additional information is needed, or should you require trained mechanic service, contact your authorized Exmark equipment dealer or distributor.

All Exmark equipment dealers and distributors are kept informed of the latest methods of servicing and are equipped to provide prompt and efficient service in the field or at their service stations. They carry ample stock of service parts or can secure them promptly for you from the factory.

All Exmark parts are thoroughly tested and inspected before leaving the factory, however, attention is required on your part if you are to obtain the fullest measure of satisfaction and performance.

TABLE OF CONTENTS

1. SAFETY **PAGE**

1.1 Safety Alert Symbol 1
1.2 Training 1
1.3 Preparation 1-3
1.4 Operation 4-7
1.5 Maintenance & Storage 7-8
1.6 Safety Signs 8-10

2. SPECIFICATIONS

2.1 Model Numbers 11
2.2 Engine 11
2.3 Fuel System 11
2.4 Electrical System 11
2.5 Operator Controls 11
2.6 Seat 11-12
2.7 Hydrostatic Ground Drive System 12
2.8 Tires & Wheels 12
2.9 Cutting Deck 12
2.10 Dimensions 13
2.11 Torque Requirements 13

3. ASSEMBLY INSTRUCTIONS

3.1 Uncrate Mower 13
3.2 Install Rollover Protection System (roll bar) 13-15
3.3 Service Battery 15-16
3.4 Install Drive Wheels 17
3.5 Check Tire Pressure 17
3.6 Install Seat 17
3.7 Install Motion Control Levers 17
3.8 Position Discharge Chute 18
3.9 Service Engine 18
3.10 Service Hydraulic Oil 18

4. OPERATION INSTRUCTIONS

4.1 Controls 18-20
4.2 Pre-Start 20
4.3 Operating Instructions 20-22
4.4 Transporting 22-23

5. MAINTENANCE & ADJUSTMENTS

5.1 Periodic Maintenance 23-32
5.2 Adjustments 32-39

6. WASTE DISPOSAL

6.1 Motor Oil Disposal 39
6.2 Mercury Switch Disposal 39
6.3 Battery Disposal 40

7. TROUBLE SHOOTING 40-41
8. ELECTRICAL DIAGRAMS 42
9. HYDRAULIC DIAGRAM 43
10. WARRANTY 44

1. SAFETY

1.1 SAFETY ALERT SYMBOL

This SAFETY ALERT SYMBOL ⚠ is used both in this manual and on the machine to identify important safety messages which must be followed to avoid accidents. This symbol means:

ATTENTION! BECOME ALERT!

YOUR SAFETY IS INVOLVED!

The safety alert symbol appears above information which alerts you to unsafe actions or situations and will be followed by the word **DANGER**, **WARNING**, or **CAUTION.**

DANGER: White lettering / Red background. Indicates an imminently hazardous situation which, if not avoided, **WILL** result in death or serious injury.

WARNING: Black lettering / Orange background. Indicates a potentially hazardous situation which, if not avoided, **COULD** result in death or serious injury.

CAUTION: Black lettering / Yellow background. Indicates a potentially hazardous situation which, if not avoided, **MAY** result in minor or moderate injury.

1.2 TRAINING

1.2.1 Regard the Exmark mower as a piece of power equipment and teach this regard to all who operate this unit.

1.2.2 Read the instructions carefully. Familiarize yourself with the controls and the proper use of the equipment. If the operator(s) or mechanic(s) can not read English, it is the owner's responsibility to explain this material to them.

1.2.3 Do not allow operation of this machine by untrained personnel. Never allow children, teenagers, or people unfamiliar with these instructions to use the mower. Local regulations may restrict the age of the operator.

1.2.4 Avoid mowing while people, especially children, or pets, are nearby. Keep in mind that the operator or user is responsible for accidents or hazards occurring to other people or their property.

1.3 PREPARATION

1.3.1 Evaluate the terrain to determine what accessories and attachments are needed to properly and safely perform the job. Only use accessories and attachments approved by Exmark.

1.3.2 The use of personal protective equipment, such as (but not limited to) protection for the eyes, ears, feet, and head is recommended.

⚠ CAUTION
POTENTIAL HAZARD ♦ This machine produces sound levels in excess of 85 dBA at the operator's ear when in operation.
WHAT CAN HAPPEN ♦ Exposure to sound levels of 85 dBA or above for extended periods of time can cause hearing loss.
HOW TO AVOID THE HAZARD ♦ Wear hearing protection when operating this machine.

1.3.3 While mowing, always wear substantial footwear and long trousers. Do not operate equipment when barefoot or when wearing open sandals.

1.3.4 Thoroughly inspect the area where the equipment is to be used and remove all stones, sticks, wires, bones, and other foreign objects which may damage the equipment or cause personal injury to the operator or bystanders.

⚠ WARNING

POTENTIAL HAZARD

- Engine exhaust contains carbon monoxide, which is an odorless deadly poison.

WHAT CAN HAPPEN

- Carbon monoxide can kill you.

HOW TO AVOID THE HAZARD

- Do not run engine indoors or in a small confined area where dangerous carbon monoxide fumes can collect.

⚠ DANGER

POTENTIAL HAZARD

- In certain conditions gasoline is extremely flammable and highly explosive.

WHAT CAN HAPPEN

- A fire or explosion from gasoline can burn you, others, and cause property damage.

HOW TO AVOID THE HAZARD

- *DO NOT* smoke while refueling, and stay away from an open flame or where gasoline fumes may be ignited by spark.
- Refuel only outdoors.
- Store gasoline in an approved container and keep it out of the reach of children.
- Add fuel before starting the engine. *Never* remove the cap of the fuel tank or add fuel when engine is running or when the engine is hot.
- Never fill the fuel tank so that the gasoline level rises above a level that is 1/2” below the bottom of the filler neck to allow for gasoline expansion and prevent fuel spillage.
- If fuel is spilled, *DO NOT* attempt to start the engine. Move away from the area of the spill and avoid creating any source of ignition until fuel vapors have dissipated.
- Do not operate without entire exhaust system in place and in proper working condition.

⚠ DANGER

POTENTIAL HAZARD

- In certain conditions gasoline is extremely flammable and highly explosive.

WHAT CAN HAPPEN

- A static charge can ignite gasoline vapors. A fire or explosion from gasoline can burn you, others, and cause property damage.

HOW TO AVOID THE HAZARD

- Purchase and store gasoline only in an approved container.
- Always place gasoline containers on the ground away from your vehicle before filling.
- Do not fill gasoline containers inside a vehicle or on a truck or trailer bed because interior carpets or plastic truck bed liners may insulate the container and slow the loss of any static charge.
- When practical, remove gas-powered equipment from the truck or trailer and refuel the equipment with its wheels on the ground.
- If this is not possible, then refuel such equipment on a truck or trailer from a portable container, rather than from a gasoline dispenser nozzle.
- If a gasoline dispenser nozzle must be used, keep the nozzle in contact with the rim of the fuel tank or container opening at all times until fueling is complete.

⚠ WARNING

POTENTIAL HAZARD

- Gasoline vapor can collect inside enclosed trailers and may be ignited by electrical sparks or hot engine/exhaust components.

WHAT CAN HAPPEN

- Explosion and fire may occur, resulting in property damage, personal injury, and/or death.

HOW TO AVOID THE HAZARD

- Provide adequate ventilation of any enclosed trailer to prevent build up of gasoline vapors, especially at floor level.
- Refuel only outdoors, never inside an enclosed trailer.
- Be sure all fuel tanks and gasoline storage containers have proper caps installed to prevent spillage and minimize vapor escaping into the trailer.
- Do not place any equipment that is leaking gasoline in an enclosed trailer.

1.4 OPERATION

Although hazard control and accident prevention are partially dependent upon the design and configuration of the equipment, these factors are also dependent upon the awareness, concern, prudence, and proper training of the personnel involved in the operation, transport, maintenance, and storage of the equipment. It is essential that all Operator Safety Mechanisms be connected and in operating condition prior to use for mowing.

⚠ WARNING
POTENTIAL HAZARD ♦ Operating engine parts, especially the muffler, become extremely hot.
WHAT CAN HAPPEN ♦ Severe burns can occur on contact. ♦ Debris, such as leaves, grass, brush, etc. can catch fire.
HOW TO AVOID THE HAZARD ♦ Allow engine parts, especially the muffler, to cool before touching. ♦ Remove accumulated debris from muffler and engine area. ♦ Install and maintain in working order a spark arrester before using equipment on forest-covered, grass-covered, or brush-covered unimproved land.

⚠ WARNING
POTENTIAL HAZARD ♦ Hands, feet, hair, clothing, or accessories can become entangled in rotating parts.
WHAT CAN HAPPEN ♦ Contact with rotating parts can cause traumatic amputation or severe lacerations.
HOW TO AVOID THE HAZARD ♦ Do not operate the machine without guards, shields, and safety devices in place and working. ♦ Keep hands, feet, hair, jewelry, or clothing away from rotating parts.

1.4.1 Give complete, undivided attention to the job at hand.

1.4.2 Mow only in daylight or good artificial light, keeping away from holes and hidden hazards. ***NEVER*** carry passengers.

DO NOT operate the mower when children or others are in the area.

1.4.3 When feasible, avoid operating the equipment in wet grass.

1.4.4 Use ***EXTREME*** caution when mowing and/or turning on slopes as loss of traction and/or tip-over could occur. The operator is responsible for safe operation on slopes.

⚠ DANGER
POTENTIAL HAZARD ♦ Mowing on wet grass or steep slopes can cause sliding and loss of control.
WHAT CAN HAPPEN ♦ Wheels dropping over edges, ditches, steep banks, or water can cause rollovers, which may result in serious injury, death or drowning.
HOW TO AVOID THE HAZARD ♦ Do not mow slopes when grass is wet. ♦ Do not mow near drop-offs or near water. ♦ Do not mow slopes greater than 15 degrees. ♦ Reduce speed and use extreme caution on slopes. ♦ Avoid sudden turns or rapid speed changes.

- See inside the back cover to determine the approximate slope angle of the area to be mowed.
- Use a walk behind mower and/or a hand trimmer near drop-offs, ditches, steep banks or water. This area can be dangerous, see Figure 1.

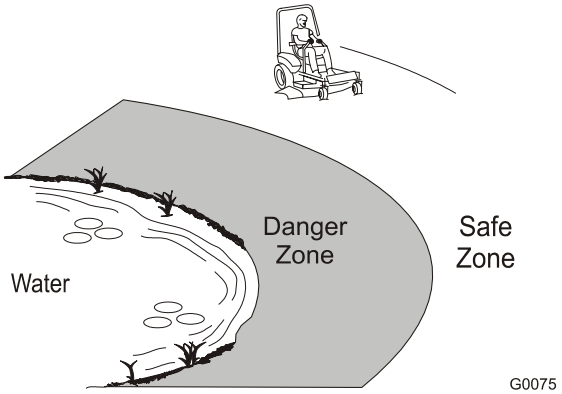

Figure 1
SAFE ZONE FOR MOWING

- Progressively greater care is needed as the slope increases.
- Always avoid sudden starting or stopping on a slope. If tires lose traction, disengage the blades and proceed slowly off the slope.
- Avoid sudden starts when mowing uphill. Mower may tip backwards.
- Be aware that loss of traction may occur going downhill. Weight transfer to the front wheels may cause drive wheels to slip and cause loss of braking and steering.
- Watch for ditches, holes, rocks, dips, and rises that change the operating angle, as rough terrain could overturn the machine.
- Remove or mark obstacles such as rocks, tree limbs, etc. from the mowing area. Tall grass can hide obstacles.
- Use extreme care with grass catchers or attachments. These can change the stability of the machine and cause loss of control.
- Follow the manufacturer's recommendations for wheel weights or counterweights to improve stability.

1.4.5 A Rollover Protection System (roll bar) is installed on the unit.

⚠ WARNING
POTENTIAL HAZARD ♦ There is no rollover protection when the roll bar is down.
WHAT CAN HAPPEN ♦ Wheels dropping over edges, ditches, steep banks, or water can cause rollovers, which may result in serious injury, death or drowning.
HOW TO AVOID THE HAZARD ♦ Keep the roll bar in the raised and locked position and use seat belt. ♦ Lower the roll bar only when absolutely necessary. ♦ Do not wear seat belt when the roll bar is down. ♦ Drive slowly and carefully. ♦ Raise the roll bar as soon as clearance permits.

- Be certain that the seat belt can be released quickly if the machine is driven or rolls into ponds of water.
- Check carefully for overhead clearances (i.e. branches, doorways, and electrical wires) before driving under any objects and do not contact them.

1.4.6 Use ***EXTREME*** caution when backing up. **LOOK BEHIND YOU!**

1.4.7 Stop the blades when crossing surfaces other than grass and when transporting the mower to and from the area to be mowed.

1.4.8 Never operate the mower with damaged guards, shields, or covers. Always have safety shields, guards, switches, and other devices in place and in proper working condition.

1.4.9 ***DO NOT*** change the engine governor settings or overspeed the engine. Operating an engine at excessive speed may increase the hazard of personal injury.

1.4.10 Disengage PTO before starting engine.

1.4.11 Start the engine carefully with feet well away from the blades.

1.4.12 Keep hands, feet, and clothing away from rotating parts while the mower is being operated.

1.4.13 Stop engine, wait for all moving parts to stop, and remove key:

- Before checking, cleaning or working on the mower.
- After striking a foreign object (inspect the mower for damage and make repairs before restarting and operating the mower).
- Before clearing blockages.
- Whenever you leave the mower.

Stop the engine and wait for all moving parts to stop:

- Before refueling.
- Before dumping the grass catcher.

1.4.14 Before stopping the engine, place the throttle control **midway** between the “slow” and “fast” positions. Allow the engine to run a minimum of 15 seconds; then stop the engine.

1.4.15 The fuel system is provided with a shut-off valve. Shut off the fuel:

- When the machine will not be used for a few days.
- During transport to and from the job.
- When parked inside a building.

1.4.16 This mower was designed for one operator only. Keep all others away from mower during operation.

1.4.17 ***Do Not*** mow with the discharge deflector raised, removed or altered unless there is a grass collection system or mulch kit in place and working properly.

1.4.18 Be aware of the mower discharge and direct discharge away from others.

1.4.19 ***Do Not*** operate mower under the influence of alcohol or drugs.

1.4.20 Use extra care when approaching blind corners, shrubs, trees, or other objects that may obscure vision.

1.4.21 If jump starting is required:

a) connect the positive (+) power cable from the positive post on the booster battery to the positive terminal post on the starter solenoid switch (this post has the positive battery cable attached to it).

b) connect the negative or ground cable (-) from the negative post on the booster battery to the engine block as far away from the battery as possible.

c) disconnect battery cables in the reverse order after starting.

1.5 MAINTENANCE AND STORAGE

1.5.1 For engine maintenance, follow the engine manufacturer's recommendations precisely as stated in the engine manual.

1.5.2 Disconnect the battery cable from the negative battery post when the unit will be allowed to sit for more than 30 days without use.

1.5.3 Allowing batteries to stand for an extended period of time without recharging them will result in reduced performance and service life. To preserve optimum battery performance and life, recharge batteries in storage when the open circuit voltage drops to 12.4 volts.

Note: To prevent damage due to freezing, battery should be fully charged before putting away for winter storage.

1.5.4 Keep engine, engine area, and pump drive belt compartment free from accumulation of grass, leaves, excessive grease or oil, and other debris which can accumulate in these areas. These materials can become combustible and may result in a fire.

1.5.5 Store fuel in a container specifically designed for this purpose in a cool, dry place.

1.5.6 Keep the mower and fuel container in locked storage to prevent children from playing or tampering with them.

1.5.7 Gasoline powered equipment or fuel containers should not be stored in a basement or any enclosed area where open pilot lights or heat appliances are present.

1.5.8 Maximum mowing results and safety can only be achieved if the mower is properly maintained and operated correctly.

1.5.9 Check all bolts frequently to maintain proper tightness.

1.5.10 Keep all guards, shields, and all safety devices in place and in safe working condition.

1.5.11 Frequently check for worn or deteriorating components that could create a hazard.

1.5.12 All replacement parts must be the same as or equivalent to the parts supplied as original equipment.

⚠ WARNING
POTENTIAL HAZARD ♦ Hydraulic fluid escaping under pressure can penetrate skin and cause injury.
WHAT CAN HAPPEN ♦ Fluid accidentally injected into the skin must be surgically removed within a few hours by a doctor familiar with this form of injury or gangrene may result.
HOW TO AVOID THE HAZARD ♦ Make sure all hydraulic fluid hoses and lines are in good condition an all hydraulic connections and fittings are tight before applying pressure to hydraulic system. ♦ Keep body and hands away from pinhole leaks or nozzles that eject high pressure hydraulic fluid. ♦ Use cardboard or paper, not your hands, to find hydraulic leaks. ♦ Safely relieve all pressure in the hydraulic system, by placing the motion control levers in neutral and shutting off the engine, before performing any work on the hydraulic system.

1.6 SAFETY SIGNS

1.6.1 Keep all safety signs legible. Remove all grease, dirt and debris from safety signs and instructional labels.

1.6.2 Safety signs must be replaced if they are missing or illegible.

1.6.3 When new components are installed, be sure that current safety signs are affixed to the replaced components.

1.6.4 New safety signs may be obtained from your authorized Exmark equipment dealer or distributor or from Exmark Mfg. Co. Inc.

1.6.5 Safety signs may be affixed by peeling off the backing to expose the adhesive surface. Apply only to a clean, dry surface. Smooth to remove any air bubbles.

1.6.6 Familiarize yourself with the following safety signs and instruction labels. They are critical to the safe operation of your Exmark commercial mower.

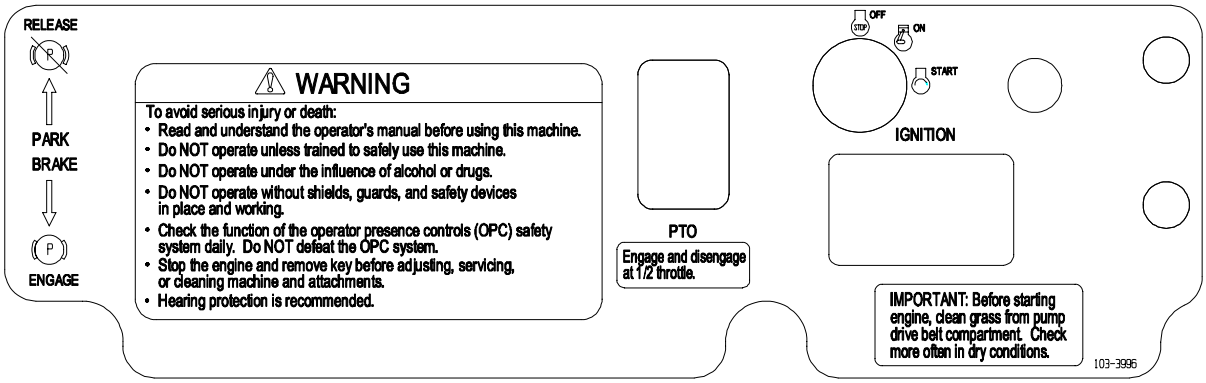

PART NO. 103-3996
LOCATION: LH Side of Console

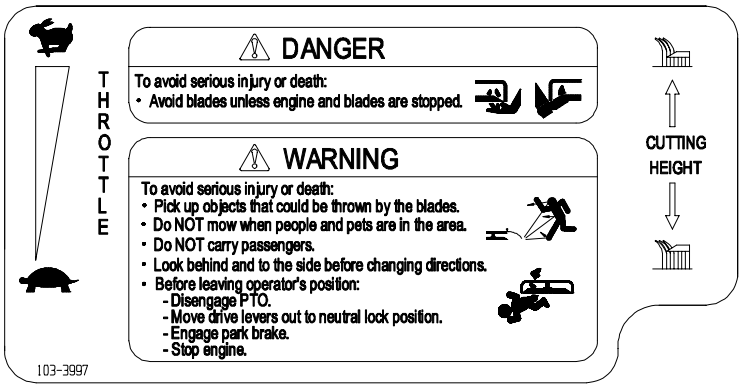

PART NO. 103-3997
LOCATION: RH Side of Console

PART NO. 1-303508
LOCATION: RH Side on Top Rear of Mower Deck

PART NO. 1-513748
LOCATION: Bottom Side of Floorpan

PART NO. 1-633313
LOCATION: RH Side on Top Front of Mower Deck

PART NO. 1-403005
LOCATION: Left and Right Corners of Mower Deck

PART NO. 1-633462
LOCATION: Rubber Heat Shield Flap behind Seat

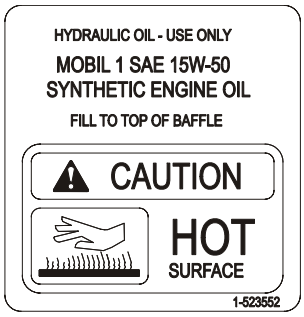

PART NO. 1-523552
LOCATION: Top of Hydraulic Reservoir, Under the Seat

PART NO. 1-513742
LOCATION: Top of Mower Deck Belt Shields, Left and Right Sides

PART NO. 107-2102
LOCATION: Inside Surface of Upper Roll bar

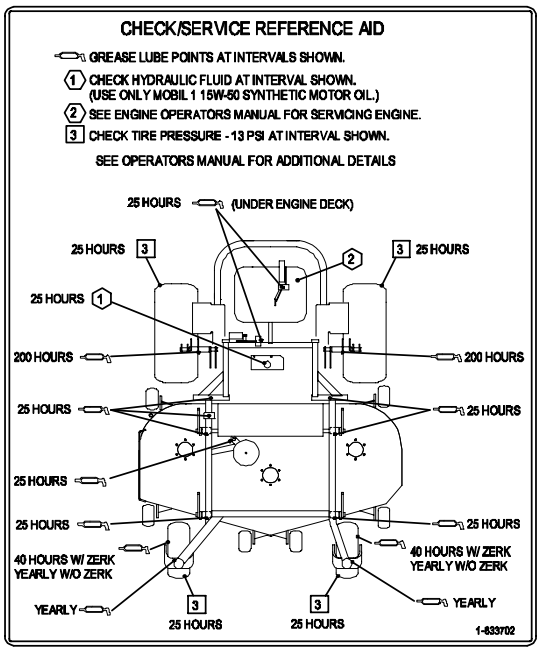

For Units with S/N 464,999 and Lower
PART NO. 1-633702
LOCATION: Bottom Side of Floor Pan

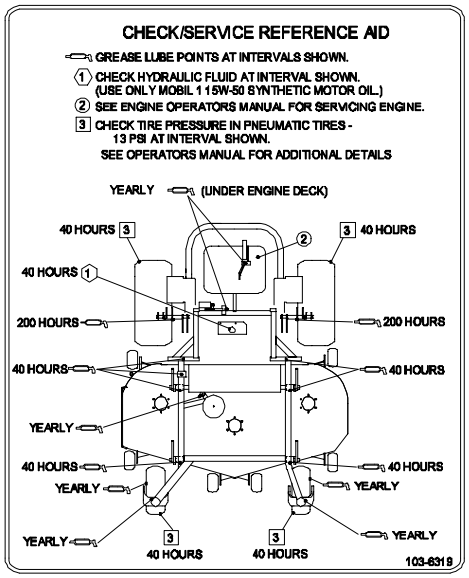

For Units with S/N 465,000 and Higher
PART NO. 103-6319
LOCATION: Bottom Side of Floor Pan

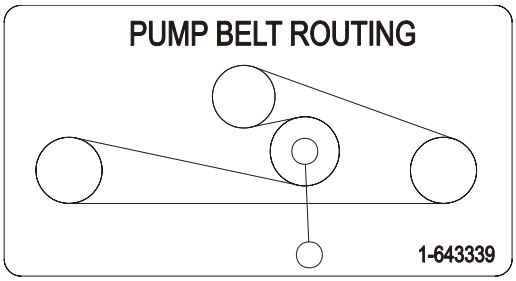

PART NO. 1-643339
LOCATION: Top of Right Engine Baffle

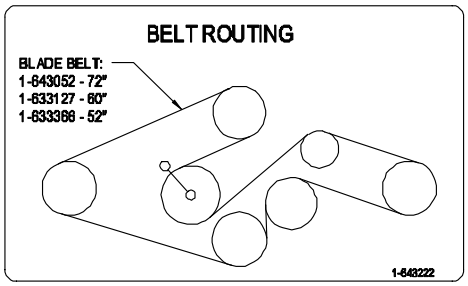

PART NO. 1-643222
LOCATION: Left of Center on Mower Deck, Under Floor Pan

PART NO. 103-0368
LOCATION: Rubber Heat Shield Flap behind Seat

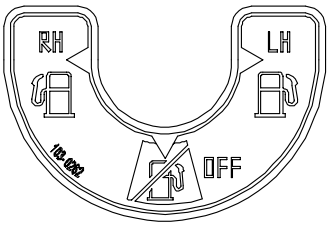

PART NO. 103-0262
LOCATION: Center Front of Console

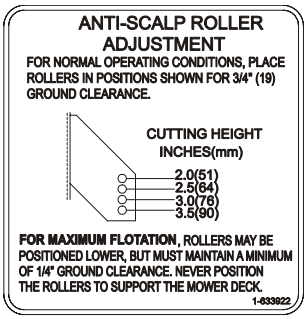

PART NO. 1-633922
LOCATION: Front Center on Top of Mower Deck

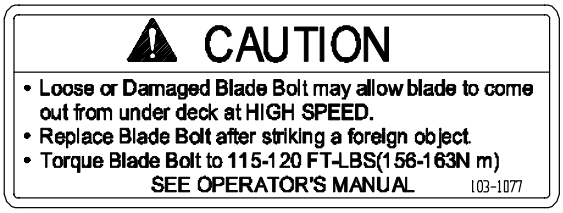

PART NO. 103-1077
LOCATION: LH Side on Top Front of Mower Deck

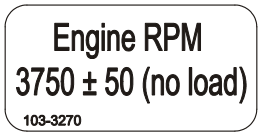

PART NO. 103-3270
LOCATION: On Engine

PART NO. 107-2112
LOCATION: Top Center of Floorpan

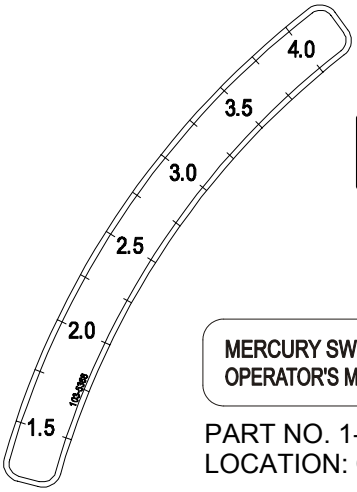

PART NO. 103-5368
LOCATION: LH Side of Cutting Height Adjustment Plate

PART NO. 98-5954
LOCATION: Under Mower Deck Belt Shield(s)

PART NO. 1-643401
LOCATION: On Tilt Switch

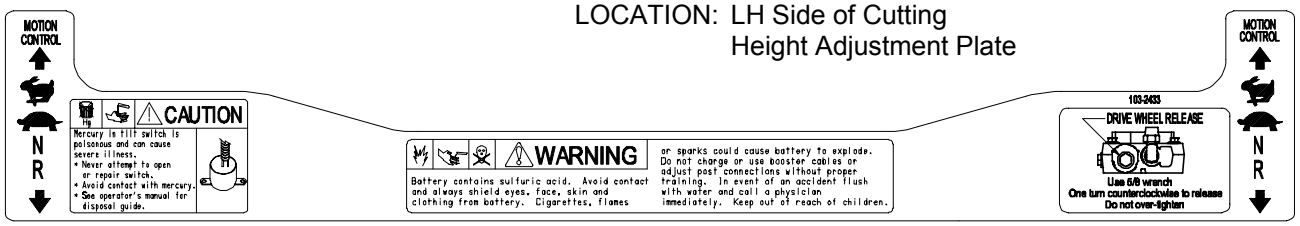

PART NO. 103-2433
LOCATION: Top of console

2. SPECIFICATIONS

2.1 MODEL NUMBER:

LZ23KC604AS; LZ20KC524AS

2.2 ENGINE:

2.2.1 Engine Specifications: See your Engine Owner's Manual

2.2.2 RPM: Full Speed: 3750 RPM (No Load) Idle: 1500 RPM

2.3 FUEL SYSTEM

2.3.1 Capacity: 9 gal. (34 L.)

2.3.2 Type of Fuel: Regular ***unleaded*** gasoline, 87 octane or higher

2.3.3 Fuel Filter: In-line 15 Micron **Kohler** P/N 2405002.

2.3.4 Fuel Shut-Off Valve: 1/4 turn increments (left tank, "OFF", right tank)

2.4 ELECTRICAL SYSTEM

2.4.1 Charging System: Flywheel Alternator

2.4.2 Charging Capacity: 15 amps

2.4.3 Battery Type: BCI Group U1

2.4.4 Battery Voltage: 12 Volt

2.4.5 Polarity: Negative Ground

2.4.6 Fuses: Two 20 amp blade type

2.4.7 Safety Interlock System:

PTO must be ***disengaged***, ***brake engaged***, and ***motion control levers out*** (neutral lock) ***to start engine***. (It is not necessary for the operator to be in the seat to start the engine.)

Operator must be in seat ***when PTO is engaged***, ***brake is disengaged***, or ***motion control levers are moved in*** or engine will stop.

Engine will stop if either the left, the right, or both levers are ***moved from neutral lock position while brake is engaged***.

2.4.8 Tilt Switch: Shuts off the engine when the unit is tilted more than 60° from horizontal.

2.5 OPERATOR CONTROLS

2.5.1 <u>Steering and Motion Control</u>:

Separate levers, on each side of the console, control speed and direction of travel of the respective drive wheels.

Steering is controlled by varying the position of the levers relative to each other.

Moving motion control levers outward (in slots) locks the drive system in neutral.

NOTE: Motion control levers are adjustable to two heights.

2.5.2 <u>PTO Engagement Switch</u>: Engages electric clutch (to drive belt) which engages mower blades.

2.5.3 <u>Parking Brake Lever</u>: Engages parking brake.

2.5.4 <u>Deck Height Adjustment Lever</u>: Sets cutting height to desired position.

NOTE: The Deck Lift Assist Lever is an optional accessory (This lever is a foot pedal that assists in raising the deck).

2.6 SEAT

2.6.1 Type:

Standard seat with high back, foam padded (internal suspension) and armrests.

NOTE: The following are optional seat accessories:

- Custom ride suspension system to enhance Standard Seat.
- Deluxe suspension seat with high back, low profile foam-in-place cushion (dampened, adjustable spring suspension) and armrests.

2.6.2 Mounting: Hinged to tilt up for access to hydraulic pumps, battery and other components. Held in tilted position with prop rod. Adjustable fore and aft seat track.

2.6.3 Armrests: Standard seat: foam padded flip-up armrests with height adjustment.
Optional suspension seat: molded adjustable flip-up armrests.

2.6.4 Seat Safety Switch: Incorporated into the Safety Interlock System. Time delay seat switch eliminates rough ground cut-outs.

2.7 HYDROSTATIC GROUND DRIVE SYSTEM

2.7.1 Hydrostatic Pumps: Two Hydro Gear BDP-10A variable displacement piston pumps.

2.7.2 Wheel Motors: Two Hydro Gear/Danfoss with 1 1/4" tapered shafts.

2.7.3 Hydraulic Oil Type: Synthetic Mobil 1 15W-50.

2.7.4 Hydraulic Oil Capacity: 2.1 qt.(2.0 L.)

2.7.5 Hydraulic Filter: Replaceable cartridge type.

P/N 1-513211: 10 microns, 18 psi bypass (Summer use above 32° F (0°C))
P/N 1-523541: 40 microns, 18 psi bypass (Winter use below 32° F (0°C))

2.7.6 Speeds: 0-8.4 mph (13.5 km/hr) forward.
0-5.7 mph (9.2 km/hr) reverse.

2.7.7 Drive wheel release valves allow machine to be moved when engine is not running.

2.8 TIRES

	Drive	Front Caster
	Pneumatic (Air-Filled)	Pneumatic (Air-Filled)
Quantity	2	2
Tread	Turf Mate	Smooth
Size	23 x 10.50-12	13 x 5.00-6
Ply Rating	4	4
Pressure	13 psi (90 kPa)	13 psi (90 kPa)

2.9 CUTTING DECK

2.9.1 Cutting Width: 52 in. (132.1 cm)
60 in. (152.4 cm)

2.9.2 Discharge: Side

2.9.3 Blade Size: (3 ea.) w/52" Deck 18.0 in. (45.7 cm)
w/60" Deck 20.5 in. (52.1 cm)

2.9.4 Blade Spindles: Solid steel spindles with1" I.D. bearings.

2.9.5 Deck Drive: Electric clutch mounted on horizontal engine shaft. "B" Section belt (with self-tensioning idler) from electric clutch to transfer shaft mounted on deck.

Blades are driven by one "B" Section belt (w/self-tensioning idler) from transfer shaft on deck to blade spindles.

2.9.6 Deck: Full floating deck is attached to out-front support frame. Six anti-scalp rollers provide maximum turf protection. Deck design allows for bagging, mulching or side discharge.

Deck Depth: 5.5" (14.0 cm)

2.9.7 Cutting Height Adjustment: an extra-long cushioned lever is used to adjust the cutting height from 1 1/2" (3.8 cm) to 4.5" (11.4 cm.) in 1/4" (.64 cm) increments. The cutting height adjustment handle has a transport position and all adjustments can be made while the operator remains seated.

2.9.8 Mulching Kit: Optional.

2.10 DIMENSIONS

2.10.1 Overall Width:

	without deck	*deflector up*	*deflector down*
w/52” Deck	49.8 in. (126.5 cm)	53.4 in. (135.6 cm)	64.2 in. (163.1 cm)
w/60” Deck	53.8 in. (136.7 cm)	61.4 in. (156.0 cm)	72.2 in. (183.4 cm)

2.10.2 Overall Length:

	w/52” Deck	*w/60” Deck*
Roll Bar - Up	78.2 in. (198.7 cm)	78.2 in. (198.7 cm)
Roll Bar - Down	88.9 in. (225.8 cm)	88.9 in. (225.8 cm)

2.10.3 Overall Height:

Roll Bar - Up	*Roll Bar - Down*
71.4 in. (181.4 cm)	53.3 in. (135.4 cm)

2.10.4 Tread Width: (center to center of tires, widthwise)

	w/52” Deck	*w/60” Deck*
Drive wheels	39.7 in. (100.1 cm)	43.7 in. (111.0 cm)
Caster wheels	37.0 in. (93.9 cm)	39.0 in. (99.1 cm)

2.10.5 Wheel Base: (center of caster tire to center of drive tire)

w/52” & 60” Decks
50.3 in. (127.8 cm)

2.10.6 Curb Weight:

w/52” Deck	*w/60” Deck*
1085 lbs. (492 kg)	1126 lbs. (511 kg)

2.11 TORQUE REQUIREMENTS

Bolt Location	Torque
Cutter Housing Spindle Nut	140-145 ft-lbs. (190-197 N-m)
Blade Mounting Bolt	115-120 ft-lbs. (156-163 N-m)
Engine Deck/Front Frame Mount Bolts	30-35 ft-lbs. (41-47 N-m)
Anti-Scalp Roller Bolts	40-45 ft-lbs. (54-61 N-m)
Engine Mounting Bolts	30-35 ft-lbs. (41-47 N-m)
Wheel Lug Nuts	90-95 ft-lbs. (122-129 N-m)
Wheel Motor Mounting Bolts	72-77 ft-lbs. (98-104 N-m)
Wheel Hub Slotted Nut	minimum125 ft-lbs. (169 N-m)
Rollover Protection System (Roll Bar) Mounting Bolts	30-35 ft-lbs. (41-47 N-m)
Deck Drive Jackshaft Nut	75-80 ft-lbs. (102-108 N-m)

3. ASSEMBLY INSTRUCTIONS

3.1 UNCRATE MOWER

3.2 INSTALL ROLLOVER PROTECTION SYSTEM (ROLL BAR)

3.2.1 Disassemble roll bar from the crate.

a) Remove roll bar tubes from sides of crate and remove screws that attach the wheel hub retaining plate to the bottom of the crate.

b) Remove the two brackets used to mount the bottom of the upper roll bar tube to the crate. Remove the 1/2-13 x 3 1/4 capscrews and 1/2-13 hex flange lock nuts from the two brackets at each end of the upper roll bar tube and retain for later use.

3.2.2 Raise the rear of the unit and support it with jack stands or equivalent support.

⚠ CAUTION
POTENTIAL HAZARD ♦ Raising the rear of the unit for assembly relying solely on mechanical or hydraulic jacks could be dangerous.
WHAT CAN HAPPEN ♦ The mechanical or hydraulic jacks may not be enough support or may malfunction allowing the unit to fall, which could cause injury.
HOW TO AVOID THE HAZARD ♦ DO NOT rely solely on mechanical or hydraulic jacks for support. Use adequate jack stands or equivalent support.

3.2.3 Remove the wheel nuts from both sides of the unit and retain for later use.

3.2.4 Install the two lower roll bar tubes.

a) Locate the left and right lower roll bar tubes.

b) Align lower roll bar tubes along wheel motor channels as shown in Figure 2.

c) **LOOSELY** install the lower roll bar hardware from the bolt bag to the tubes in the following order (Reference Figure 2 for alignment and installation instructions below):

1) Install one 3/8-16 nyloc nut and spring disk washer to bolt protruding from the wheel motor channel as shown.

NOTE: Be sure the spring disk washer cone is installed towards the nyloc nuts.

2) Install one 3/8-16 x 1 hex capscrew, spring disk washer and 3/8-16 whizlock nut to the top front hole as shown.

3) Install one 3/8-16 x 1 hex capscrew, spring disk washer and 3/8-16 whizlock nut to the top rear hole as shown.

4) Install one 3/8-16 x 4 1/2 hex capscrew, spring disk washer and 3/8-16 whizlock nut through the top tube as shown.

NOTE: Be sure the spring disk washer cone is installed towards the head of all capscrews.

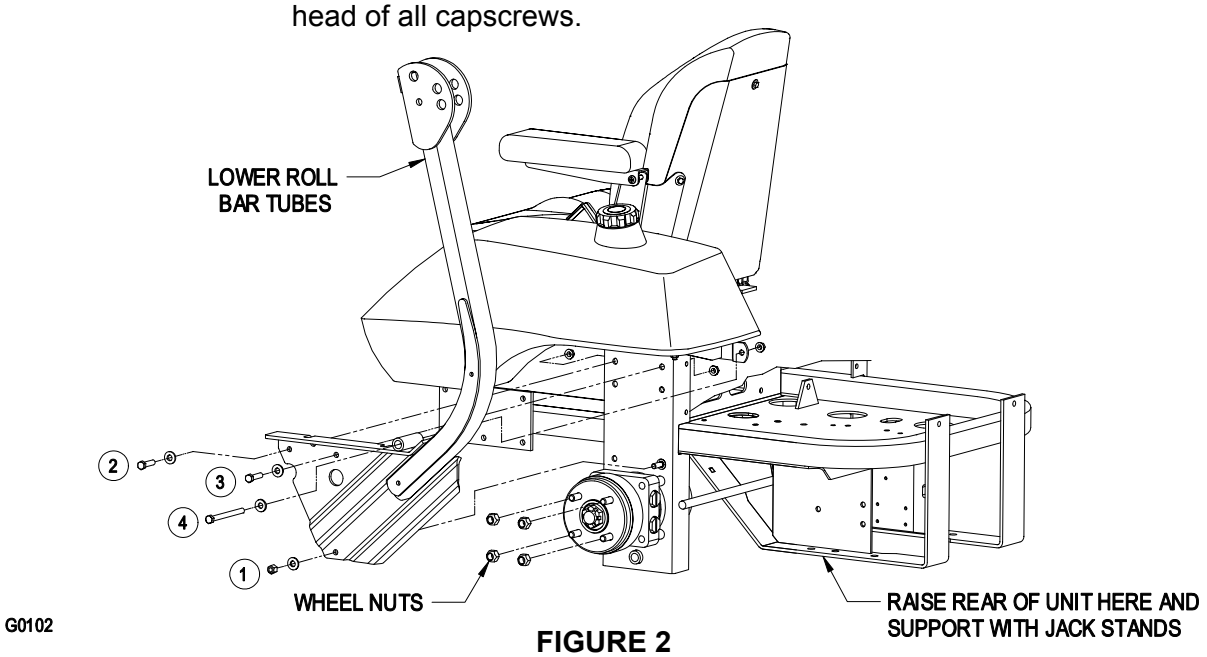

FIGURE 2
LOWER ROLL BAR INSTALLATION

3.2.5 Install the upper u-shaped section of the roll bar. (Reference Figure 3 for alignment and installation instructions below):

a) Locate the latch pin assemblies (pin and hairpin connected with a lanyard).

b) Install a 1/2-13 x 3 1/4 capscrew in the washer on the lanyard of each pin assembly.

Note: Make sure the bent tab in the washer points toward the head of the capscrew.

b) Lightly oil the inside surfaces of the ear-shaped plates at the upper end of the lower roll bar tubes.

c) Locate the upper u-shaped section of the roll bar. Install the upper roll bar section using one 1/2-13 x 3 1/4 capscrew (from step b) and one 1/2-13 hex flange lock nut on each side. Do not over tighten. Make sure upper roll bar can pivot freely.

Notes:

- Make sure the capscrew and nuts are installed with the nut to the inside of the roll bar.
- Make sure the tab on the lanyard washer is installed as shown and points toward the front of the unit.

d) Raise the roll bar into the upright position and secure with the latch pin assemblies on each side. Install latch pin from outer surface of roll bar assembly and secure with the hairpin to the inside.

e) Torque all lower roll bar hardware attached to the machine frame to 30-35 ft-lbs. (41-47 N-m).

f) Tighten the front knobs against the upper roll bar ends.

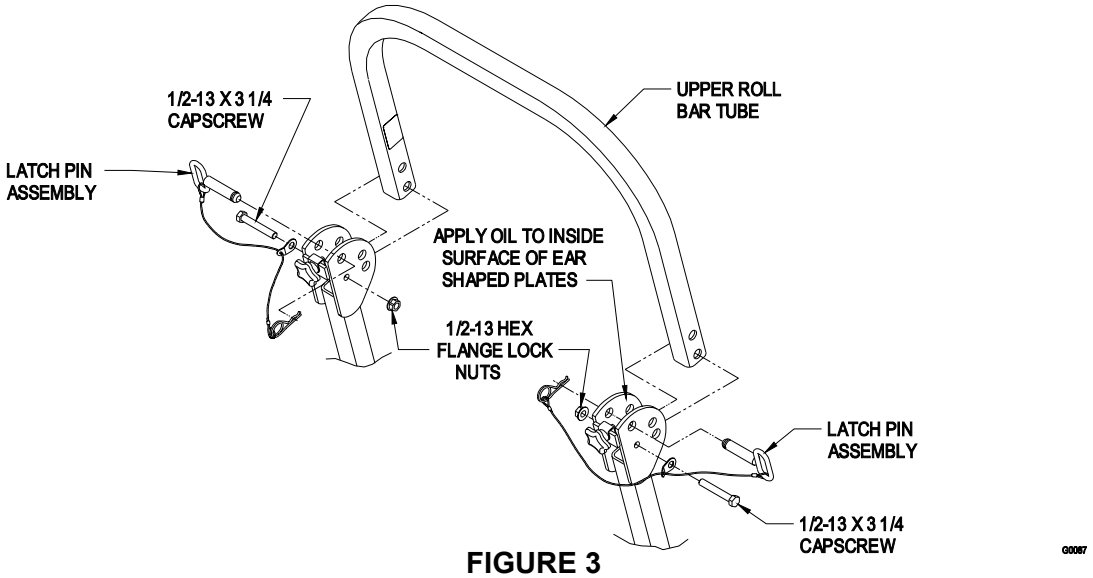

FIGURE 3
UPPER ROLL BAR INSTALLATION

3.3 SERVICE BATTERY

WARNING: Battery posts, terminals, and related accessories contain lead compounds, chemicals known to the State of California to cause cancer and reproductive harm. **Wash hands after handling.**

The machine is shipped with a filled lead acid battery.

3.3.1 Unhook seat latch and tilt seat up to gain access to the battery.

⚠ DANGER

POTENTIAL HAZARD
- Charging the battery may produce explosive gasses

WHAT CAN HAPPEN
- Battery gasses can explode causing serious injury.

HOW TO AVOID THE HAZARD
- Keep sparks, flames, or cigarettes away from battery.
- Ventilate when charging or using battery in an enclosed space.
- Make sure venting path of battery is always open once battery is filled with acid.

3.3.2 Check the voltage of the battery with a digital voltmeter. Locate the voltage reading of the battery in the table below and charge the battery for the recommended time interval to bring the charge up to a full charge of 12.6 volts or greater.

IMPORTANT: Make sure the negative battery cables are disconnected and the battery charger used for charging the battery has an output of 16 volts and 7 amps or less to avoid damaging the battery (see the following chart for recommended charger settings).

Voltage Reading	Percent Charge	Maximum Charger Settings	Charging Interval
12.6 or greater	100%	16 volts/7 amps	No Charging Required
12.4 – 12.6	75 – 100%	16 volts/7 amps	30 Minutes
12.2 – 12.4	50 – 75%	16 volts/7 amps	1 Hour
12.0 – 12.2	25 – 50%	14.4 volts/4 amps	2 Hours
11.7 – 12.0	0 – 25%	14.4 volts/4 amps	3 Hours
11.7 or less	0%	14.4 volts/2 amps	6 Hours or More

⚠ CAUTION

POTENTIAL HAZARD
- If the ignition is in the “ON” position there is potential for sparks and engagement of components.

WHAT CAN HAPPEN
- Sparks could cause an explosion or moving parts could accidentally engage causing personal injury.

HOW TO AVOID THE HAZARD
- Be sure ignition switch is in the “OFF” position before charging the battery.

3.3.3 Connect the negative battery cables.

NOTE: If the positive cable is also disconnected, connect the ***positive (red) cable and the red wire*** to the positive terminal on the battery ***first***, then connect the negative (black) cable and white/white wire to the negative terminal on the battery (red wire and white/white wire are only on some units). Slip insulator boot over the positive terminal.

NOTE: If time does not permit charging the battery, or if charging equipment is not available, connect the negative battery cables and run the vehicle continuously for 20 to 30 minutes to sufficiently charge the battery.

⚠ WARNING

BATTERY CONTAINS SULFURIC ACID, AVOID CONTACT AND ALWAYS SHIELD EYES, FACE, SKIN AND CLOTHING FROM BATTERY. CIGARETTES, FLAMES OR SPARKS COULD CAUSE BATTERY TO EXPLODE. DO NOT CHARGE OR USE BOOSTER CABLES OR ADJUST POST CONNECTIONS WITHOUT PROPER TRAINING. IN EVENT OF AN ACCIDENT FLUSH WITH WATER AND CALL A PHYSICIAN IMMEDIATELY. KEEP OUT OF REACH OF CHILDREN.

3.4 INSTALL DRIVE WHEELS.

3.4.1 Mount drive wheels with the valve stem to the outside of the unit. Secure using four (4) 1/2-20 wheel nuts (installed on studs in hubs) for each wheel. Torque to 95 ft-lbs (128 N·M).

3.5 CHECK TIRE PRESSURE.

3.5.1 Check tire pressure in drive tires. Proper inflation pressure for tires is 13 psi (90 kPa). Adjust if necessary.

Check tire pressure in Caster tires. Proper inflation pressure for tires is 13 psi (90 kPa).

3.6 INSTALL SEAT

a) Remove seat assembly from the crate.

b) Remove the four 5/16-18 whizlock nuts from the seat track studs at the bottom of the seat. Retain for use later.

c) Align the seat track studs on the bottom of the seat with the holes in the seat frame. Place seat on top of the frame and secure with the four 5/16-18 whizlock nuts remove in step b).

3.7 INSTALL MOTION CONTROL LEVERS.

3.8.1 Loosen and remove the two (2) 3/8” x 1” bolts and spring disc washers which attach the motion control levers to the control arm shafts for shipping and the two (2) 3/8” x 1” bolts and spring disc washers which are screwed into the control arm shafts.

a) Install the left motion control lever onto the control arm shaft (See Figure 4) on the left side of the console. Place the lever (with the mounting plate towards the rear) on the **outside** of the control arm shaft and secure with the bolts and washers. Position the lever so the bolts are in the center of the slots on the lever mounting plate and tighten until snug. Repeat on opposite side of unit.

NOTE: There are two lever height options available. Place the levers in the top two holes to increase height of the levers, or in the bottom two holes to decrease the height of the levers.

If the levers do not align with each other when in the neutral position, (See Figure 5) loosen the hardware and make the appropriate adjustment by sliding/tilting the lever(s) forward or backward until properly aligned and tighten hardware.

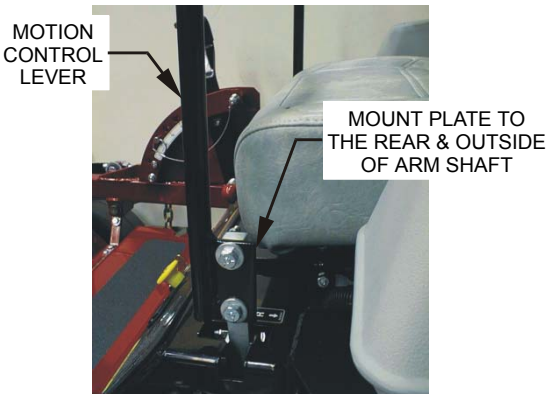

FIGURE 4
CONTROL ARM SHAFT

FIGURE 5
LEVER ALIGNMENT

b) If the ends of the levers hit against each other, while in the drive position (levers rotated in as far as possible), make adjustments by moving the levers outwards to the neutral lock position and carefully bend them outward. Move them back to the drive position and check for clearance, repeat if necessary.

3.8 POSITION DISCHARGE CHUTE.

3.9.1 Loosen two (2) 5/16” nyloc nuts attaching discharge chute. Lower the discharge chute into position. Retighten nyloc nuts until chute is snug but can pivot freely.

3.9 SERVICE ENGINE.

Engine is shipped with oil; check oil level and if necessary and fill to the appropriate level with oil as specified in Engine Owner’s Manual.

3.10 SERVICE HYDRAULIC OIL

The machine is shipped with hydraulic oil in the reservoir. Run the machine for approximately 15 minutes to allow any extra air to purge out of the hydraulic system. Check hydraulic reservoir and if necessary fill the reservoir to the appropriate level with Mobil 1 15W-50 synthetic motor oil. Replace hydraulic reservoir cap and tighten until snug. ***Do not overtighten.***

NOTE: The baffle is labeled “HOT” and “COLD”. The oil level varies with the temperature of the oil. The “HOT” level shows the level of oil when it is at 225°F (107°C). The “COLD” level shows the level of the oil when it is at 75°F (24°C). Fill to the appropriate level depending upon the temperature of the oil. For example: If the oil is about 150° F (65°C). Fill to halfway between the “HOT” and “COLD” levels. If the oil is at room temperature (about 75° F (24°C)), fill only to the “COLD” level.

4. OPERATION INSTRUCTIONS

4.1 CONTROLS

4.1.1 Familiarize yourself with all controls before operating the mower.

4.1.2 Motion Control Levers: Located on each side of the console. The left lever controls the flow of hydraulic oil from the left hydrostatic pump to the left drive wheel motor. The right lever controls the flow of hydraulic oil from the right hydrostatic pump to the right drive wheel motor.

IMPORTANT: To begin movement (forward or backward) the operator must be in the seat, the brake lever must be disengaged (pushed down) before the motion control levers can be moved in or the engine will kill.

When levers are centered in the T-slot the drive system is in the neutral position. With levers moved out in the T-slot the drive system is in the ***neutral lock*** position (See Figure 6).

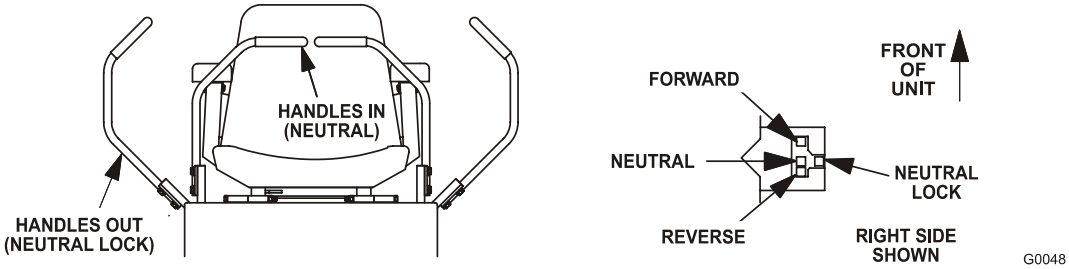

FIGURE 6
MOTION CONTROL POSITIONS

By moving both levers an ***equal*** amount forward or back from the neutral position the machine can be caused to move forward or backward in a straight line.

Movement of the ***left lever forward*** will cause the ***left drive wheel*** to rotate in a forward direction. Movement of the ***right lever forward*** will cause the ***right drive wheel*** to rotate in a forward direction. To ***stop*** forward travel, pull the levers back to the neutral position.

To ***turn left*** while moving forward, move the ***left lever*** back toward neutral to slow the left drive wheel.

To ***turn right*** while moving forward, move the ***right lever*** back toward neutral to slow the right drive wheel.

To make a ***zero turn*** to the ***left***, pull the left lever back beyond neutral while holding the right lever slightly ahead of neutral.

To make a ***zero turn*** to the ***right***, pull the right lever back beyond neutral while holding the left lever slightly ahead of neutral.

Pulling the ***levers back*** from the neutral position will cause the respective drive wheels to rotate in a ***reverse*** direction (spring tension can be felt when moving into reverse from neutral).

To turn to the left while backing, move the left lever forward toward neutral. To turn to the right while backing, move the right lever forward toward neutral.

⚠ CAUTION
POTENTIAL HAZARD ♦ Machine can spin very rapidly by positioning one lever too much ahead of the other.
WHAT CAN HAPPEN ♦ Operator may lose control of the machine, which may cause damage to the machine or injury.
HOW TO AVOID THE HAZARD ♦ Use caution when making turns. ♦ Slow the machine down before making sharp turns.

4.1.3 Tracking Adjustment Knob: Located under the seat on the RH pump control link. Rotating this knob allows fine tuning adjustments so that the machine tracks straight with the drive levers in the full forward position.

Stop machine and wait for all moving parts to stop. Engage park brake. Unhook seat latch and tilt seat forward to gain access to the tracking knob. Rotate the knob clockwise (as viewed from the rear of the machine) to cause the machine to track more to the right and counterclockwise to cause the machine to track more to the left. Adjust in quarter-turn increments until the machine tracks straight. Check that the machine does not creep when in neutral with the park brakes disengaged.

IMPORTANT: Do not rotate the knob too far, as this may cause the machine to creep in neutral. Refer to section 5.2.13 for control linkage adjustment.

4.1.4 PTO Engagement Switch: Located just left of center on the console (left side of ignition switch).

Switch must be ***pulled out*** to the "**ROTATE**" position to engage the blades. Switch is pushed in to the "**STOP**" position to stop the blades.

4.1.5 Choke Control: Located at lower center on the console (right side of ignition switch).

Choke is used to aid in starting a cold engine. The choke control is pulled out to put the choke in the **"ON"** position and pushed in to put the choke control in the **"OFF"** position. ***DO NOT*** run a warm engine with choke in the "ON" position.

4.1.6 Throttle Control: Located on console just right of center.

Throttle is used to control engine speed. Moving throttle lever ***forward*** will increase engine speed and moving throttle lever ***to the rear*** will decrease engine speed.

4.1.7 Brake Lever: Located on left side of unit, just to the front of the console. The brake lever engages a parking brake on the drive wheels.

Pull the lever up and ***rearward*** to ***engage*** the brake.

Push the lever ***forward*** and ***down*** to ***disengage*** the brake.

The unit must be tied down and brake engaged when transporting.

4.1.8 Ignition Switch: Located on the lower center of console.

The ignition switch is used to start and stop the engine. The switch has three positions “OFF”, “ON” and “START”. Insert key into switch and rotate clockwise to the “ON” position. Rotate clockwise to the next position to engage the starter (key must be held against spring pressure in this position).

Brake must be engaged, motion control levers out (neutral lock position) and PTO switch “OFF” to start engine. (It is not necessary for the operator to be in the seat to start the engine.)

4.1.9 Hour Meter: Located just left of center on console. The hour meter is connected to a pressure switch installed in the engine block and it records the number of hours that the engine has run. If the ignition switch is left on without engine running, hour meter will not run.

NOTE: This switch is not a low oil sensor and will not alert the operator if the engine oil is low.

4.1.10 Fuel Shut-Off Valve: Located directly below center of console. The fuel shut-off valve is used to shut off the fuel when the machine will not be used for a few days, during transport to and from the job site, and when parked inside a building. The valve has three positions, each position made in 1/4 turn increments.

FUEL FLOW	VALVE HANDLE POSITION
“OFF”	DOWN
RIGHT TANK	RIGHT
LEFT TANK	LEFT

4.1.11 Drive Wheel Release Valves: Located on the top left front corner of hydrostatic pumps. Drive wheel release valves are used to release the hydrostatic drive system to allow the machine to be pushed without the engine running. Unhook seat latch and tilt seat up to gain access to pumps.

With a 5/8 wrench, turn both valves one turn counter-clockwise to release drive system. Turn clockwise to reset system. ***DO NOT overtighten. DO NOT tow machine.***

4.2 PRE-START

4.2.1 Fill fuel tanks. For best results use only clean, fresh regular grade ***unleaded*** gasoline with an octane rating of 87 or higher. Regular grade leaded gasoline may also be used; however, combustion chamber and cylinder head will require more frequent service. See Engine Owner's Manual.

DO NOT add oil to gasoline.

DO NOT overfill fuel tank. Never fill the fuel tank so that the fuel level rises above a level that is 1/2” below the bottom of the filler neck to allow for fuel expansion and prevent fuel spillage.

4.2.2 Make sure you understand the controls, their locations, their functions, and their safety requirements.

4.2.3 Refer to Maintenance, Section 5, and perform all the necessary inspection and maintenance steps.

4.3 OPERATING INSTRUCTIONS

4.3.1 Operate units with the roll bar in the raised and locked position and use seat belt. There is no rollover protection when the roll bar is down. If it is necessary to lower roll bar do not wear the seat belt. Raise the roll bar as soon as clearance permits.

4.3.2 Open fuel shut-off valve (left or right tank).

4.3.3 Starting Engine:

Brake must be engaged, motion control levers out (neutral lock position) and PTO switch "OFF" to start engine. (It is not necessary for the operator to be in the seat to start the engine.)

On a ***cold*** engine, place the ***throttle midway*** between the "SLOW" and "FAST" positions and pull ***choke*** control out into the "ON" position. Turn ignition switch to the "start" position. Release the switch as soon as the engine starts.

IMPORTANT: ***DO NOT*** **crank the engine continuously for more then ten (10) seconds at a time. If the engine does not start, allow a 60 second cool-down period between starting attempts. Failure to follow these guidelines can burn out the starter motor.**

After starting a cold engine, gradually return choke to the "OFF" position as the engine warms up.

On a ***warm*** engine, place the ***throttle midway*** between the "SLOW" and "FAST" positions and leave the ***choke*** in the "OFF" position.

4.3.4 Engaging PTO:

⚠ DANGER
POTENTIAL HAZARD ♦ The rotating blades under the mower deck are dangerous.
WHAT CAN HAPPEN ♦ Blade contact can cause serious injury or kill you.
HOW TO AVOID THE HAZARD ♦ *DO NOT* put hands or feet under the mower or mower deck when the blades are engaged.

⚠ DANGER
POTENTIAL HAZARD ♦ An uncovered discharge opening will allow objects to be thrown in an operator's or bystander's direction. Also, contact with the blade could occur.
WHAT CAN HAPPEN ♦ Thrown objects or blade contact can cause serious injury or death.
HOW TO AVOID THE HAZARD ♦ Never operate the mower with the discharge deflector raised, removed, or altered unless there is a grass collection system or mulch kit in place and working properly.

The PTO push-pull switch engages the cutting blades. Be sure that ***all*** persons are ***clear*** of the mower deck and discharge area ***before engaging*** PTO.

IMPORTANT: Operator must be in seat before the PTO can be engaged.

Set throttle to "midway" position. Pull outward on the switch to the "ROTATE" position. Accelerate to full throttle to begin mowing.

4.3.5 Stopping PTO: Set throttle to the "midway" position. Push in on the switch to the "STOP" position stopping the PTO.

4.3.6 Stopping Engine: Bring unit to a ***full stop***. ***Disengage*** the PTO, ***move motion control levers out*** to the ***neutral lock*** position and ***set parking brake***.

Before stopping the engine, place the throttle control **midway** between the "slow" and "fast" positions. Allow the engine to run a minimum of 15 seconds; then stop the engine.

Rotate ignition switch to "OFF" position. Remove the key to prevent children or other unauthorized persons from starting engine.

Close fuel shut-off valve when machine will not be used for a few days, when transporting, and when the unit is parked inside a building.

4.4 TRANSPORTING

4.4.1 Transporting a Unit: Use a heavy-duty trailer or truck to transport the machine. Lock brake and block wheels. Securely fasten the machine to the trailer or truck with straps, chains, cable, or ropes. Be sure that the trailer or truck has all necessary lighting and marking as required by law. Secure a trailer with a safety chain.

⚠ CAUTION

POTENTIAL HAZARD

- This unit does not have proper turn signals, lights, reflective markings, or a slow moving vehicle emblem. These items are required to drive on a public street or roadway.

WHAT CAN HAPPEN

- Driving on a street or roadway without such equipment is dangerous and can lead to accidents causing personal injury.
- Driving on a street or roadway without such equipment may also be a violation of State laws and the operator may be subject to traffic tickets and/or fines.

HOW TO AVOID THE HAZARD

- Do not drive a unit on a public street or roadway.

⚠ WARNING

POTENTIAL HAZARD

- Loading a unit on a trailer or truck increases the possibility of backward tip-over.

WHAT CAN HAPPEN

- Backward tip-over of the unit could cause serious injury or death.

HOW TO AVOID THE HAZARD

- Use extreme caution when operating a unit on a ramp.
- Use only a single, full width ramp; DO NOT use individual ramps for each side of the unit.
- If individual ramps must be used, use enough ramps to create an unbroken ramp surface wider than the unit.
- DO NOT exceed a 15° angle between ramp and ground or between ramp and trailer or truck.
- Avoid sudden acceleration while driving unit up a ramp to avoid tipping backward.
- Avoid sudden deceleration while backing unit down a ramp to avoid tipping backward.

4.4.2 Loading a Unit: Use extreme caution when loading units on trailers or trucks. One full width ramp that is wide enough to extend beyond the rear tires is recommended instead of individual ramps for each side of the unit. The lower rear section of the tractor frame extends back between the rear wheels and serves as a stop for tipping backward. Having a full width ramp provides a surface for the frame members to contact if the unit starts to tip backward. If it is not possible to use one full width ramp, use enough individual ramps to simulate a full width continuous ramp.

Ramp should be long enough so that the angles between the ramp and the ground and the ramp and the trailer or truck do not exceed 15°. A steeper angle may cause mower deck components to get caught as the unit moves from ramp to trailer or truck. Steeper angles may also cause the unit to tip backward. If loading on or near a slope, position the trailer or truck so it is on the down side of the slope and the ramp extends up the slope. This will minimize the ramp angle. The trailer or truck should be as level as possible.

DO NOT attempt to turn the unit while on the ramp, you may lose control and drive off the side.

Avoid sudden acceleration when driving up a ramp and sudden deceleration when backing down a ramp. Both maneuvers can cause the unit to tip backward.

5. MAINTENANCE & ADJUSTMENTS

⚠ WARNING
POTENTIAL HAZARD ♦ While maintenance or adjustments are being made, someone could start the engine.
WHAT CAN HAPPEN ♦ Accidental starting of the engine could seriously injure you or other bystanders.
HOW TO AVOID THE HAZARD ♦ Remove the key from the ignition switch and pull the wire(s) off the spark plug(s) before you do any maintenance. Also push the wire(s) aside so it does not accidentally contact the spark plug(s).

⚠ WARNING
POTENTIAL HAZARD ♦ The engine can become very hot.
WHAT CAN HAPPEN ♦ Touching a hot engine can cause severe burns.
HOW TO AVOID THE HAZARD ♦ Allow the engine to cool completely before service or making repairs around the engine area.

5.1 PERIODIC MAINTENANCE

5.1.1 Check engine oil level:

Service Interval: Daily

a) Stop engine and wait for all moving parts to stop. Make sure unit is on a level surface.

b) Check with engine cold.

c) Clean area around dipstick. Remove dipstick and wipe oil off. Reinsert the dipstick and push it all the way down into the tube. Remove the dipstick and read the oil level.

d) If the oil level is low, wipe off the area around the oil fill cap, remove cap and fill to the "FULL" mark on the dipstick. Use oil as specified in Engine Owner's Manual. ***DO NOT*** overfill.

IMPORTANT*: DO NOT* operate the engine with the oil level below the "LOW" (or "ADD") mark on the dipstick, or over the "FULL" mark.

5.1.2 Check battery charge:

Service Interval: Monthly

Allowing batteries to stand for an extended period of time without recharging them will result in reduced performance and service life. To preserve optimum battery performance and life, recharge batteries in storage when the open circuit voltage drops to 12.4 volts.

Note: To prevent damage due to freezing, battery should be fully charged before putting away for winter storage.

a) Check the voltage of the battery with a digital voltmeter. Locate the voltage reading of the battery in the table below and charge the battery for the recommended time interval to bring the charge up to a full charge of 12.6 volts or greater.

IMPORTANT: Make sure the negative battery cables are disconnected and the battery charger used for charging the battery has an output of 16 volts and 7 amps or less to avoid damaging the battery (see chart below for recommended charger settings).

Voltage Reading	Percent Charge	Maximum Charger Settings	Charging Interval
12.6 or greater	100%	16 volts/7 amps	No Charging Required
12.4 – 12.6	75 – 100%	16 volts/7 amps	30 Minutes
12.2 – 12.4	50 – 75%	16 volts/7 amps	1 Hour
12.0 – 12.2	25 – 50%	14.4 volts/4 amps	2 Hours
11.7 – 12.0	0 – 25%	14.4 volts/4 amps	3 Hours
11.7 or less	0%	14.4 volts/2 amps	6 Hours or More

IMPORTANT: For Kohler EFI units: Unplug the harness from the ECU before performing any welding on the equipment.

5.1.3 Clean engine cooling system:

Service Interval: Daily or more often in dry conditions

⚠ CAUTION
POTENTIAL HAZARD ♦ Excessive debris and damaged or missing rubber baffles can cause the engine and hydraulic system to overheat.
WHAT CAN HAPPEN ♦ Excessive debris around the engine cooling air intake and inside of the pump drive belt compartment can create a fire hazard.
HOW TO AVOID THE HAZARD ♦ Clean all debris from inside of pump drive belt compartment daily.

IMPORTANT:
BEFORE STARTING ENGINE CLEAN GRASS FROM PUMP DRIVE BELT COMPARTMENT. CHECK MORE OFTEN IN DRY CONDITIONS. E633462

Information located:

- On console decal 103-3996 below ignition switch
- On decal 1-633462 behind seat on rubber heat shield flap

a) Stop engine, wait for all moving parts to stop, and remove key.

b) Clean all debris from rotating engine air intake screen and from around engine shrouding.

c) Clean all debris from inside of pump drive belt compartment.

d) Inspect rubber engine baffles for proper fit. Replace if necessary.

5.1.4 Clean grass build-up under deck.

Service Interval: Daily

a) Stop engine, wait for all moving parts to stop, and remove key.

b) Raise deck to the transport (5" (12.7 cm) cutting height) position. Lift the front of unit and support unit using jack stands or equivalent support.

⚠ CAUTION
POTENTIAL HAZARD ♦ Raising the mower deck for service or maintenance relying solely on mechanical or hydraulic jacks could be dangerous.
WHAT CAN HAPPEN ♦ The mechanical or hydraulic jacks may not be enough support or may malfunction allowing the unit to fall, which could cause injury.
HOW TO AVOID THE HAZARD ♦ DO NOT rely solely on mechanical or hydraulic jacks for support. Use adequate jack stands or equivalent support.

c) Clean out any grass build-up from underside of deck and in discharge chute.

5.1.5 Check mower blades.

Service Interval: Daily

a) Stop engine, wait for all moving parts to stop, and remove key.

b) Lift deck and secure in raised position as stated in Section 5.1.4.

c) Inspect blades and sharpen or replace as required.

d) Re-install the blades (if they were removed) by placing a block of wood between the front or rear baffles and the blade then torque the blade bolts to 115-120 ft-lbs. (156-163 N-m). Be sure the spring disk washer cone is installed toward the bolt head (See Figure 7).

⚠ CAUTION
POTENTIAL HAZARD ♦ Operating a mower deck with loose or weakened blade bolts can be dangerous.
WHAT CAN HAPPEN ♦ A loose or weakened blade bolt could allow a blade rotating at a high speed to come out from under the deck, causing serious injury or property damage.
HOW TO AVOID THE HAZARD ♦ Replace the blade bolt after striking a foreign object. Use only the following replacement parts: Blade bolt – PN 103-0862 Spring disc washer – PN 103-0865 ♦ DO NOT lubricate the threads of the bolt or spindle before assembly. ♦ Torque the blade bolt to 115-120 ft. lbs. (156-163 N-m)

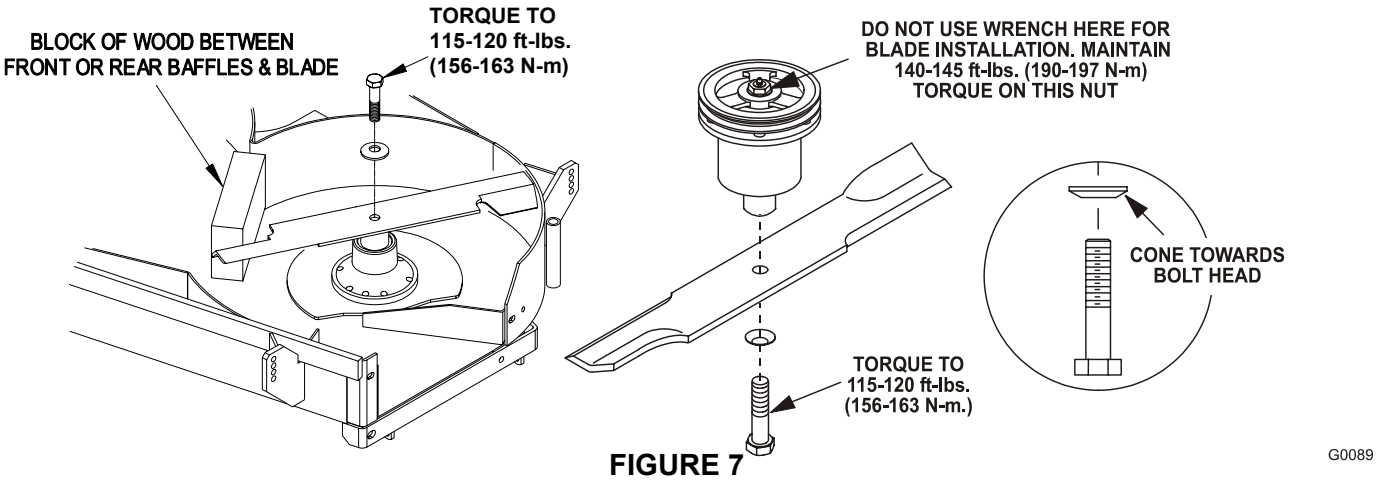

FIGURE 7
BLADE BOLT INSTALLATION

5.1.6 Check safety interlock system.

Service Interval: Daily

a) Check starting circuit. Starter ***should*** crank with, parking brake ***engaged,*** PTO ***disengaged*** and motion control levers moved out in the ***neutral lock*** position. The operator does not need to be in the seat to start the engine.

Try to start with ***operator in seat***, parking brake ***disengaged,*** PTO ***disengaged*** and motion control levers in the ***neutral lock*** position - starter ***must not crank***.

Try to start with ***operator in seat***, parking brake ***engaged,*** PTO ***engaged*** and motion control levers in the ***neutral lock*** position - starter ***must not crank***.

Try to start with ***operator in seat***, parking brake ***engaged,*** PTO ***disengaged, and the left motion control lever in,*** starter ***must not crank,*** repeat again with the ***right lever in***, then with ***both levers in*** - starter ***must not crank.***

b) Check the kill circuits. Run engine at one-third throttle, ***disengage*** parking brake and ***raise off*** of seat (but do not get off of machine) engine ***must stop*** after approx. 1/2 second has elapsed (seat has time delay kill switch to prevent cut-outs on rough terrain).

Run engine at one-third throttle, ***engage PTO*** and ***raise off*** of seat (but do not get off of machine) engine ***must stop*** after 1/2 second has elapsed.

Run engine at one-third throttle, with brake disengaged, move levers in and raise off seat (but do not get off of machine) engine ***must stop*** after 1/2 second has elapsed.

Again, run engine at one-third throttle, brake ***engaged,*** and move ***left motion control lever in*** - engine ***must stop.***

Repeat again moving the ***right lever in***, then moving ***both levers in*** - engine ***must stop*** whether operator is ***on seat or not***.

NOTE: If machine *does not* pass any of these tests, do not operate. Contact your authorized EXMARK SERVICE DEALER.

IMPORTANT: It is essential that operator safety mechanisms be connected and in proper operating condition prior to use for mowing.

5.1.7 Check rollover protections systems (roll bar) pins

Service Interval: Daily

a) Make sure latch pin and hair pin are fully installed and lanyard is in good condition.

5.1.8 Check for loose hardware.

Service Interval: Daily

a) Stop engine, wait for all moving parts to stop, and remove key.

b) Visually inspect machine for any loose hardware or any other possible problem. Tighten hardware or correct the problem before operating.

5.1.9 Service air cleaner.

Service Interval: 50 hrs.
More often under severe conditions.
See Engine manual for additional information.

a) Stop engine, wait for all moving parts to stop, and remove key.

b) Loosen wing nut and remove air cleaner compartment cover.

c) Remove foam pre-cleaner element and wash in warm water with detergent. Rinse until all traces of detergent are eliminated and squeeze out excess water ***(DO NOT wring)***. Air dry. Saturate with engine oil and squeeze out excess oil.

d) Check paper element. Gently tap the flat side of the paper element to dislodge any dirt. ***DO NOT*** wash or use pressurized air to clean paper element. Replace if dirty, bent or damaged.

e) Reinstall foam pre-cleaner to paper element, then reinstall paper element and cover.

5.1.10 Change engine oil:

Service Interval: 100 hrs.

NOTE: Change oil and filter after first five (5) hrs. of operation.

a) Stop engine, wait for all moving parts to stop, and remove key.

b) Drain oil while engine is warm from operation.

c) The oil drain is located on right hand side of engine.

Place pan under machine to catch oil and remove drain plug. Allow oil to drain, then replace plug.

d) Replace the oil filter ***every other*** oil change. Clean around oil filter and unscrew filter to remove. Before reinstalling new filter, apply a thin coating of oil on the surface of the rubber seal. Turn filter clockwise until rubber seal contacts the filter adapter then tighten filter an additional 2/3 to 3/4 turn.

e) Clean around oil fill cap and remove cap. Fill to specified capacity and replace cap. Use oil recommended in engine owner's manual. ***DO NOT*** overfill.

f) Start the engine and check for leaks.

5.1.12 Check hydraulic oil level:

Service Interval: **40 hr.**

a) Stop engine and wait for all moving parts to stop.

b) Unhook seat latch and tilt seat up.

c) Clean area around hydraulic reservoir cap and remove cap. Oil level should be to the top of the baffle inside the tank. If not, add oil. **Use only Mobil 1 15W-50 synthetic motor oil.** Replace hydraulic reservoir cap and tighten until snug. ***Do not overtighten.***

NOTE: The baffle is labeled “HOT” and “COLD”. The oil level varies with the temperature of the oil. The “HOT” level shows the level of oil when it is at 225°F (107°C). The “COLD” level shows the level of the oil when it is at 75°F (24°C). Fill to the appropriate level depending upon the temperature of the oil. For example: If the oil is about 150° F (65°C), fill to halfway between the “HOT” and “COLD” levels. If the oil is at room temperature (about 75° F (24°C)), fill only to the “COLD” level.

5.1.13 Check tire pressures:

Service Interval: 40 hrs.

a) Stop engine, wait for all moving parts to stop, and remove key.
b) Check tire pressure in drive tires.
c) Inflate drive tires to 13 psi (90 kPa).
d) Check tire pressure in Caster tires.
e) Inflate caster tires to 13 psi (90 kPa).

NOTE: Do not add any type of tire liner or foam fill material to the tires. Excessive loads created by foam filled tires may cause failures to the hydro drive system, frame, and other components. Foam filling tires will void the warranty.

5.1.14 Check condition of belts:

Service Interval: 40 hrs.

a) Stop engine, wait for all moving parts to stop, and remove key.
b) Unhook seat latch and tilt seat up. Lift the rubber flap on front side of the engine to check pump drive belt.
c) Remove left and right belt shields on deck and lift up floor pan to inspect deck drive belt.
d) Check under machine to inspect the mule drive belt.
e) See Sections 5.2.3, through 5.2.5 for belt adjustment.

5.1.15 Lubricate grease fittings:

Service Interval: Refer to chart.

a) Stop engine, wait for all moving parts to stop, and remove key.
b) Lubricate fittings with one to two pumps of NGLI grade #2 multi-purpose gun grease.

Refer to the following chart for fitting locations and lubrication schedule.

LUBRICATION CHART

FITTING LOCATIONS	INITIAL PUMPS	NO. of PLACES	SERVICE INTERVAL
1. Front Caster wheel hubs	*0	2	*yearly
2. Front Caster Pivots	*0	2	*yearly
3. Height Adj. Shaft Bearings	1	5	40 hours
4. Deck Drive Belt Idler Arm			
For Units With S/N 464,999 and Lower	1	1	40 hours
For Units With S/N 465,000 and Higher	1	1	Yearly
5. Brake Brackets	1	2	200 hours
6. Mule Drive Belt Idler Arm			
For Units With S/N 464,999 and Lower	1	1	40 hours
For Units With S/N 465,000 and Higher	1	1	Yearly
7. Pump Drive Belt Idler Arm			
For Units With S/N 464,999 and Lower	1	1	40 hours
For Units With S/N 465,000 and Higher	1	1	Yearly
8. Deck Rear Struts	1	2	40 hours

∗ See Section 5.1.15 c) for special lubrication instructions on the front caster pivots and Section 5.1.16 for special lubrication instructions on the front casters wheel hubs.

No. 6 (Mule Drive Belt Idler Arm)
Located Under Engine Frame

No. 7 (Pump Drive Belt Idler Arm)
Located Under Engine Frame

No. 4,6, & 7 (Idler Pivots)
For Units with S/N 464,999 and Lower:
Monthly disassemble belt and spring and grease under a "No Load" condition.

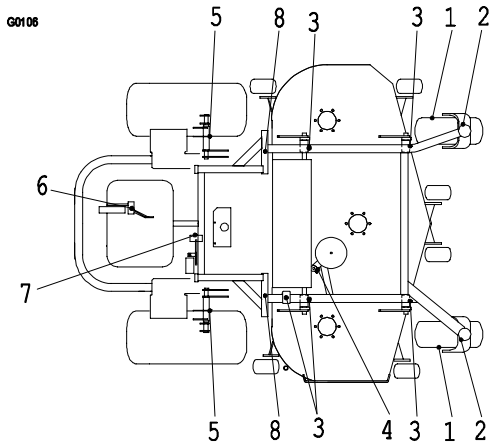

c) Lubricate front caster pivots once a year. Remove hex plug and cap. Thread grease zerk in hole and pump with grease until it oozes out around top bearing. Remove grease zerk and thread plug back in. Place cap back on.

5.1.16 Lubricate caster wheel hubs:

Service Interval: Once Yearly

a) Stop engine, wait for all moving parts to stop, and remove key.

b) Remove caster wheel from caster forks.

c) Remove seal guards from the wheel hub.

d) Remove one of the spacer nuts from the axle assembly in the caster wheel. Note that thread locking adhesive has been applied to lock the spacer nuts to the axle. Remove the axle (with the other spacer nut still assembled to it) from the wheel assembly.

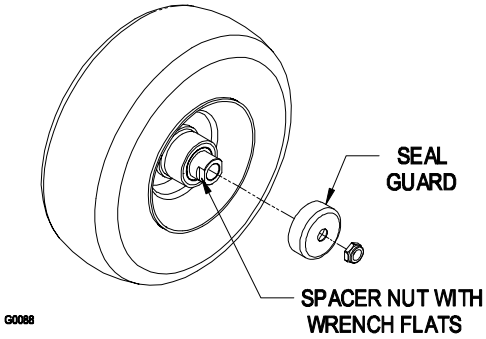

FIGURE 8
CASTER WHEEL ASSEMBLY

e) Pry out seals, and inspect bearings for wear or damage and replace if necessary.

f) Pack the bearings with NGLI grade #1 multi-purpose grease.

g) Insert (1) bearing, (1) new seal into the wheel.

NOTE: Seals (Exmark PN 103-0063) must be replaced.

h) If the axle assembly has had both spacer nuts removed (or broken loose), apply a thread locking adhesive to (1) spacer nut and thread onto the axle with the wrench flats facing outward. Do not thread spacer nut all of the way onto the end of the axle. Leave approximately 1/8" (3 mm) from the outer surface of the spacer nut to the end of the axle inside the nut.

i) Insert the assembled nut and axle into the wheel on the side of the wheel with the new seal and bearing.

j) With the open end of the wheel facing up, fill the area inside the wheel around the axle full of NGLI grade #1 multi-purpose grease.

k) Insert the second bearing and new seal into the wheel.

l) Apply a thread locking adhesive to the 2nd spacer nut and thread onto the axle with the wrench flats facing outward.

m) Torque the nut to 75-80 in-lbs. (8-9 N-m), loosen, then re-torque to 20-25 in-lbs. (2-3 N-m). Make sure axle does not extend beyond either nut.

n) Re-install the seal guards over the wheel hub and insert wheel into caster fork. Re-install caster bolt and tighten nut fully.

IMPORTANT: To prevent seal and bearing damage, check the bearing adjustment often. Spin the caster tire. The tire should not spin freely (more than 1 or 2 revolutions) or have any side play. If the wheel spins freely, adjust torque on spacer nut until there is a slight amount of drag. Re-apply threadlocking adhesive.

5.1.17 Lubricate seat switch actuator:

Service Interval: 160 hrs.

a) Stop engine, wait for all moving parts to stop, and remove key.
b) Unhook seat latch and tilt seat up.
c) Lubricate switch actuator rod with spray type lubricant or light oil.

5.1.18 Lubricate brake handle pivot:

Service Interval: 160 hrs.

a) Stop engine, wait for all moving parts to stop, and remove key.
b) Lubricate bronze bushings on brake handle pivot with a spray type lubricant or light oil.

5.1.19 Lubricate brake rod bushings:

Service Interval: 160 hrs.

a) Stop engine, wait for all moving parts to stop, and remove key.
b) Unhook seat latch and tilt seat up.
c) Lubricate bronze bushings on each end of brake rod shaft with a spray type lubricant or a light oil (bushings are located to the inside of the flange bearings).

5.1.20 Lubricate motion control bronze bushings:

Service Interval: 160 hrs.

a) Stop engine, wait for all moving parts to stop, and remove key.
b) Unhook seat latch and tilt seat up.
c) Lubricate bronze bushings on flange bearings securing the motion control arm shafts with a light oil or a spray type lubricant.

5.1.21 Remove engine shrouds and clean cooling fins:

Service Interval: 80 hrs.

a) Stop engine, wait for all moving parts to stop, and remove key.
b) Remove cooling shrouds from engine and clean cooling fins. Also clean dust, dirt, and oil from external surfaces of engine, which can cause improper cooling.
c) Make sure cooling shrouds are reinstalled. Operating the engine without cooling shrouds will cause engine damage due to overheating.

5.1.22 Check spark plugs:

Service Interval: 160 hrs.

a) Remove spark plugs, check condition and reset gaps, or replace with new plugs. See Engine Owners Manual.

5.1.23 Change fuel filter:

Service Interval: As Required

a) A fuel filter is installed between the fuel tanks and the engine. Replace when necessary with **Kohler** P/N 2405002.

5.1.24 Change hydraulic system filter:

Service Interval: After First 250 hrs.

Then yearly thereafter

NOTE: Use only Exmark Part No. 1-513211 for summer use above 32° F (0°C) or Part No. 1-523541 for winter use below 32° F (0°C).

a) Stop engine, wait for all moving parts to stop, and remove key.

b) Raise seat.

c) Carefully clean area around filter. It is ***important*** that ***no dirt*** or ***contamination*** enter hydraulic system.

d) Unscrew filter to remove and allow oil to drain from reservoir.

IMPORTANT: Before reinstalling new filter, fill it with Mobil 1 15W-50 and apply a thin coat of oil on the surface of the rubber seal.

Turn filter clockwise until rubber seal contacts the filter adapter, then tighten the filter an additional 2/3 to 3/4 turn.

e) Fill reservoir as stated in Section 5.1.12.

f) Raise the rear of machine up and support with jack stands (or equivalent support) just high enough to allow drive wheels to turn freely.

g) Start engine and move throttle control ahead to full throttle position. Move the speed control levers to the full speed and run for several minutes. Shut down machine and recheck oil level.

Do not change hydraulic system oil (except for what can be drained when changing filter), unless it is felt the oil has been contaminated or been extremely hot.

Changing oil unnecessarily could ***damage*** hydraulic system by introducing contaminates into the system.

5.1.25 Wheel hub - slotted nut torque specification.

Service Interval: 500 hrs

When tightening the slotted nut on the wheel motor tapered shaft:

a) Torque the slotted nut to 125 ft. lbs (169 N-M).

b) Check distance from bottom of slot in nut to inside edge of hole. Two threads (0.1”) or less should be showing.

c) If more than two threads (0.1”) are showing remove nut and install washer (PN 1-523157) between hub and nut.

d) Torque the slotted nut to 125 ft. lbs (169 N-M).

e) Then tighten nut until the next set of slots line up with the cross hole in shaft.

f) Replace cotter pin.

NOTE: Do not use antisieze on wheel hub.

5.1.26 Fuel Tank – mounting hardware specification.

When installing the nuts on the fuel tank studs, fully tighten the nyloc nut and back off 1/2 turn. This allows for normal fuel tank expansion and contraction with changes in temperature and fuel levels.

5.1.27 Thread locking adhesives such as “Loctite 242” or “Fel-Pro, Pro-Lock Nut Type” are used on the following fasteners:

a) Pump drive sheave set screws.

b) Square head setscrews on Hydro pump control arms.

c) Sheave retaining bolt in the end of engine crankshaft.

d) Caster wheel spacer nuts

e) Fuel tank bulkhead fitting nuts.

Adhesives such as “Loctite RC/609 or RC/680” or “Fel-Pro Pro-Lock Retaining I or Retaining II” are used on the following:

a) Fuel tank studs, where studs are inserted into tank.

5.1.28 Mobil HTS grease (or food-grade antisieze) is used in the following locations:

a) Between the cutter housing spindle and bearings.

b) Between the cutter housing spindle and sheave.

c) Under top cutter housing bearing guard.

d) Between jackshaft and bearings and jackshaft and sheaves.

5.1.29 Dielectric grease is used on all blade type electrical connections to prevent corrosion and loss of contact.

5.2 ADJUSTMENTS

IMPORTANT: Disengage PTO, shut off engine, wait for all moving parts to stop, and remove key before servicing, cleaning, or making any adjustments to the unit.

5.2.1 Cutting Height Adjustment.

a) Stop machine and move drive levers out to neutral lock position.

b) Disengage PTO.

c) Raise the deck lever to the transport position (also the 4.5” (11.4 cm) cutting height position). See Figure 9.

The deck can be raised by pulling the deck lever up.

NOTE: When changing cutting height positions, always come to a complete stop and disengage the PTO.

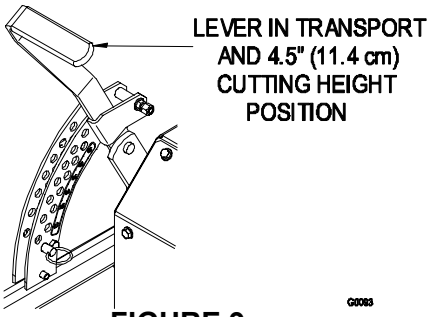

FIGURE 9
CUTTING HEIGHT POSITION

d) Insert height adjustment pin into hole corresponding to desired cutting height and install hairpin cotter. See decal on the side of deck lift plate.

e) Move lever out of transport (or 4.5” (11.4 cm) cutting height) position and down onto height adjustment pin to mow at selected height.

f) To transport, move lever back up to transport (or 4.5” (11.4 cm) cutting height) position.

g) Adjust anti-scalp rollers for Normal Operating Conditions. Stop engine, wait for all moving parts to stop, and remove key. Place rollers in one of the positions shown in Figure 10. Rollers will maintain 3/4 in. (19 mm) clearance to the ground to minimize gouging and roller wear or damage.

For Maximum Deck Flotation, place rollers one hole position lower. Rollers should maintain 1/4 in. (6.4 mm) minimum clearance to ground. ***Do Not*** adjust rollers to support the deck. Be sure *bolt is tightened properly* or loss of anti-scalp roller may result.

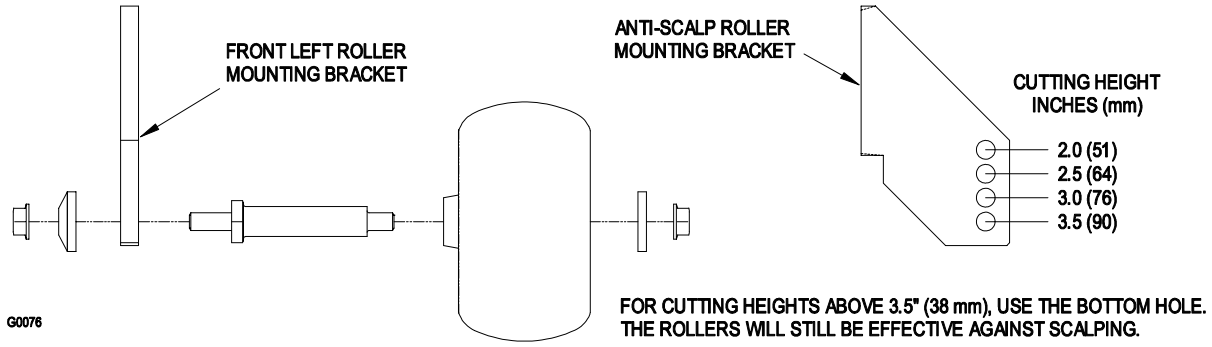

FIGURE 10
ANTI-SCALP ROLLER ADJUSTMENT

5.2.2 Deck Leveling

a) Position mower on a flat surface.

b) Stop engine, wait for all moving parts to stop, and remove key.

c) Check tire pressure in drive tires. Proper inflation pressure for tires is 13 psi (90 kPa). Adjust if necessary.

Check tire pressure in Caster tires. Proper inflation pressure for tires is 13 psi 90 kPa).

d) Set anti-scalp rollers to top holes or remove them completely for this adjustment.

e) Raise the deck to the 4.5” (11.4 height position (also transport position) and take all force off of the two large deck lift springs by loosening the nuts at the front of each spring. See Figure 11.

f) Lower the deck to the 1-1/2” (3.81 cm) height position.

g) Place a 3/4” (19 mm) thick block of wood under each of the two (2) rear anti-scalp roller brackets and place one under ***one of the front center*** anti-scalp roller brackets.

h) Loosen the two (2) top chain bolts in slots in the rear deck lift arms. Loosen jam nuts and back off the socket head adjusting screws on the bottom of the arms until the chains are just loose. Turn the socket head adjusting screws in until slack is taken out of each chain. Tighten the jam nuts. Tighten the chain bolts in the deck lift arms making sure they don’t move while tightening.

i) Loosen the four (4) nuts which secure the front swivels (two per side) until the front chains are loose and front of deck is supported by the 3/4” (19 mm) block. Do not loosen the front chain hardware.

j) On left side, adjust front swivel using the locking nut behind the swivel until the front chain is tight and all slack is removed from linkage. Do not lift front of deck off 3/4” (19 mm) block. Secure front swivel using locking nut in front of swivel. Repeat for right side.

k) Recheck that the 3/4” (19 mm) blocks fit just snugly under the brackets and that the tension on all the chains are approximately equal. Make sure all chain attachment bolts are tight. Reposition anti-scalp rollers and tighten securely.

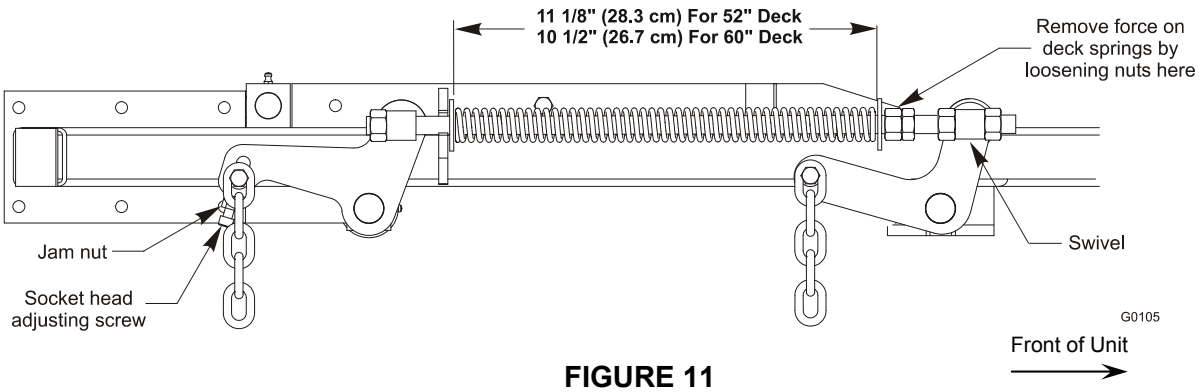

FIGURE 11
SWIVEL ADJUSTMENT
SPRING COMPRESSION ADJUSTMENT

l) Raise deck lift lever to the 4.5” (11.4 cm) cutting height position See Figure 9. Adjust spring compression until proper distance is obtained between the two large washers (See Figure 11). Adjustment is made by turning the nut at the front of each spring (clockwise will shorten the spring, counter-clockwise will lengthen the spring). Lock in position with jam nuts.

NOTE: When above adjustments have been made, the front of the deck will be slightly lower than the rear of the deck.

5.2.3 Pump Drive Belt Tension.

Self-tensioning - No adjustment necessary.

5.2.4 Mule Drive Belt Tension Adjustment.

Self-tensioning idler, adjust as follows:

a) Stop engine, wait for all moving parts to stop, and remove key.

b) Check to make sure the center of the bolt head in the center of the spring loaded pulley, on left side engine deck support, is positioned between the centers of the two alignment holes in the left support plate (See Figure 12). It is necessary to adjust the belt tension when the center of the bolt head is at or below the center of the bottom alignment hole.

c) When adjustment is necessary, loosen the idler pulley on the right-hand side so it can move up and down in the slot.

Place a wrench on the 3/8” nut in the center of the spring loaded pulley and apply upward pressure to relieve tension on the spring (a 1/2” drive breaker bar and 9/16 socket works best).

Reposition the adjusting pulley to the bottom of the slot.

NOTE: When installing a new belt, it is necessary to reposition the right adjusting pulley upward in the slot in order to position the center of the spring loaded pulley between the alignment holes.

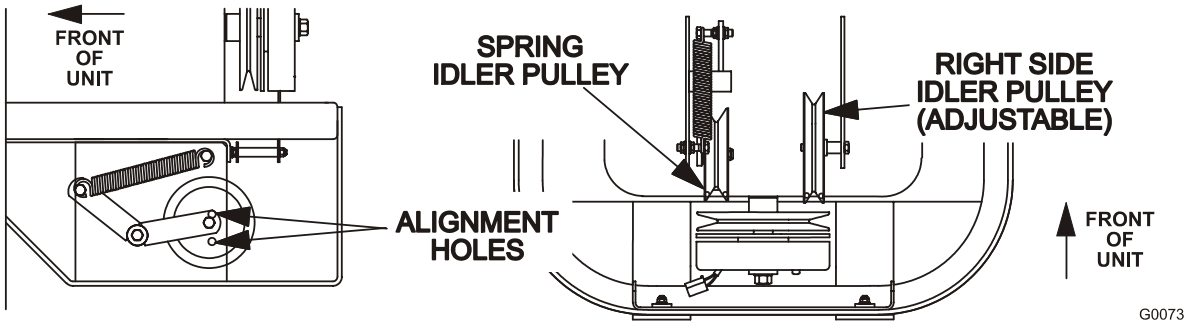

FIGURE 12
MULE DRIVE BELT ADJUSTMENT

5.2.5 Deck Belt Tension.

a) The deck belt is tensioned by a self-tensioning idler, ***no adjustment is necessary***.

5.2.6 Adjust Seat Switch

a) If necessary, adjust the seat actuator rod length to where the machine will shut off when the operator raises off the seat (with ***brake disengaged or PTO engaged***) but will continue to run with operator in seat (a slight shift in weight should not shut machine off).

Normal adjustment is when length of spring is 2.09” (5.3 cm) (with seat up).

NOTE: To prevent the engine from cutting out when operating over rough ground, the unit is equipped with a time-delayed seat switch. When the operator raises off the seat with either the brake disengaged or the PTO engaged, the engine should stop after 1/2 second has elapsed.

b) To adjust seat switch actuator rod length, loosen lock nut on bottom of the actuator rod (5/16 x 7” bolt) and adjust the nuts to move the actuator plate/washer up or down on the rod, then retighten.

5.2.7 Belt Guide Adjustment.

a) Stop engine, wait for all moving parts to stop, and remove key.

b) Remove the belt shield on the right side of mower deck.

c) Note belt guide bolted to deck near the shield support stud and right-hand pulley. Guide should be 1/8” (3.2 mm) away from the belt, with bolt-end of guide near end of slot (See Figure 13).

d) If adjustment is necessary, loosen the bolt securing the belt guide and make proper adjustment. Tighten hardware.

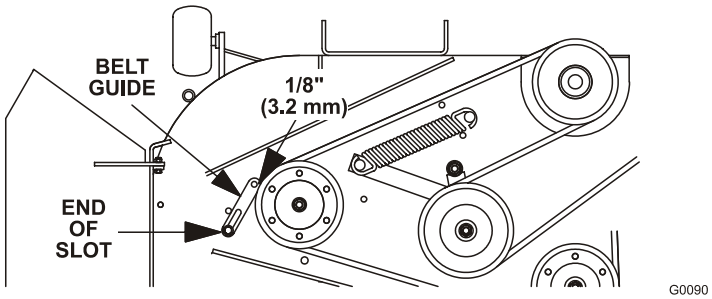

FIGURE 13
BELT GUIDE POSITIONING

5.2.8 Brake Link Adjustment.

Check to make sure brake is adjusted properly.

a) Disengage brake lever (lever down).

b) Measure the length of the spring. Measurement should be 2.75” (7.0 cm) between washers (see Figure 14).

c) If adjustment is necessary, tighten the nut directly below the yoke and loosen the bottom nut (bottom one of the two tightened together) below the spring. Turn the nut directly below the washer (top nut of the two tightened together) until the correct measurement is obtained. Tighten the two nuts together and repeat on opposite side of unit. Turn clockwise to shorten spring length and turn counter-clockwise to lengthen the spring.

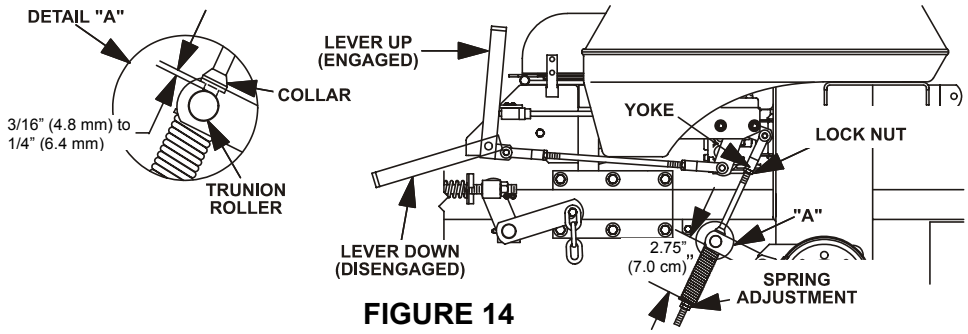

FIGURE 14
BRAKE ADJUSTMENT

5.2.9 Brake Adjustment.

a) Check for brake link 2.75" (7.0 cm) measurement as described in section 5.2.8.

b) Engage brake lever (lever up).

c) Measure the distance between the trunion roller and the rod collar. Measurement should be 3/16" (4.8 mm) to 1/4" (6.4 mm). See Figure 14.

d) If adjustment is necessary, loosen the nut directly below the yoke. Turn the bottom nut (below washer) until the correct measurement is obtained (See Figure 14) turn nut clockwise to lengthen the gap (screws rod into yoke) and turn counter-clockwise to shorten the gap (screws rod out of yoke). Tighten nut against yoke and check opposite side of unit, repeat if necessary.

5.2.10 Adjust Throttle Lever Tension.

a) Stop engine, wait for all moving parts to stop, and remove key.

b) Tension in throttle lever can be adjusted by adjusting the tightness of the lever pivot bolt, which is located under the console (See Figure 15).

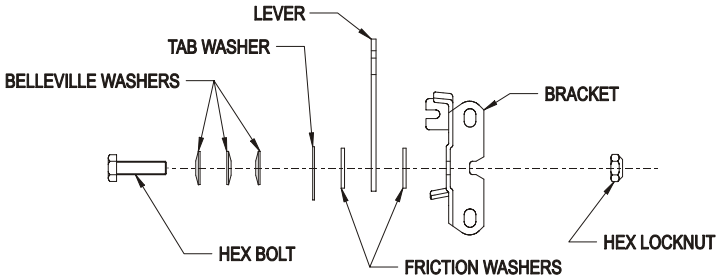

FIGURE 15
THROTTLE TENSION

5.2.11 Electric Clutch Adjustment:

No adjustment necessary.

5.2.12 Reverse Indicator Adjustment:

a) Stop engine, wait for all moving parts to stop, and remove key.

b) Unhook seat latch and tilt seat forward.

c) Begin with either the left or right motion control lever. Move lever to the neutral position and pull lever back until the clevis pin (on arm below pivot shaft) contacts the end of the slot (just beginning to put pressure on spring), See Figure 16.

d) Check where lever is relative to notch in console (should be centered allowing lever to pivot outward to the neutral lock position).

e) If adjustment is needed, loosen the nut against the yoke and while applying slight rearward pressure on the motion control lever, turn the head of the adjustment bolt in the appropriate direction until lever is centered (keeping rearward pressure on the lever will keep the pin at the end of the slot and allow the adjustment bolt to move the lever to the appropriate position). Tighten lock nut.

f) Repeat on opposite side of unit.

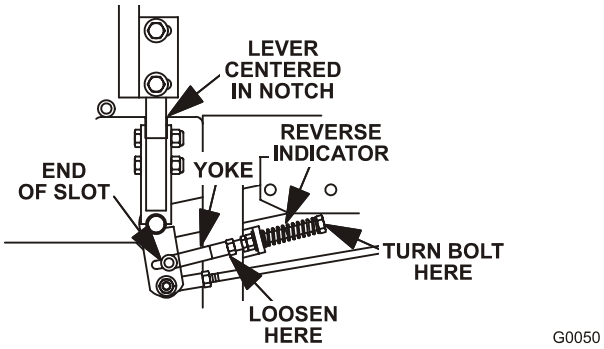

FIGURE 16
REVERSE INDICATOR ADJUSTMENT

5.2.13 Motion control linkage adjustment.

⚠ WARNING
POTENTIAL HAZARD ♦ Engine must be running and drive wheels must be turning so motion control adjustment can be performed.
WHAT CAN HAPPEN ♦ Contact with moving parts or hot surfaces may cause personal injury.
HOW TO AVOID THE HAZARD ♦ Keep fingers, hands, and clothing clear of rotating components and hot surfaces.

⚠ CAUTION
POTENTIAL HAZARD ♦ Raising the mower deck for service or maintenance relying solely on mechanical or hydraulic jacks could be dangerous.
WHAT CAN HAPPEN ♦ The mechanical or hydraulic jacks may not be enough support or may malfunction allowing the unit to fall, which could cause injury.
HOW TO AVOID THE HAZARD ♦ DO NOT rely solely on mechanical or hydraulic jacks for support. Use adequate jack stands or equivalent support.

a) This adjustment must be made with the drive wheels turning. First raise the frame and block up so that drive wheels can rotate freely.

b) Remove the electrical connection from the seat safety switch, located directly to the left of the seat switch assembly beside the hydraulic oil reservoir.

Temporarily install a jumper wire across the terminals in the connector of the wiring harness.

c) Run the unit at least 5 minutes with the drive levers at full forward speed to bring hydraulic system oil up to operating temperature.

d) Unhook seat latch and tilt seat forward.

e) Loosen lock nuts from the ball joints at each end of the LH pump control linkage. (See Figure 17).

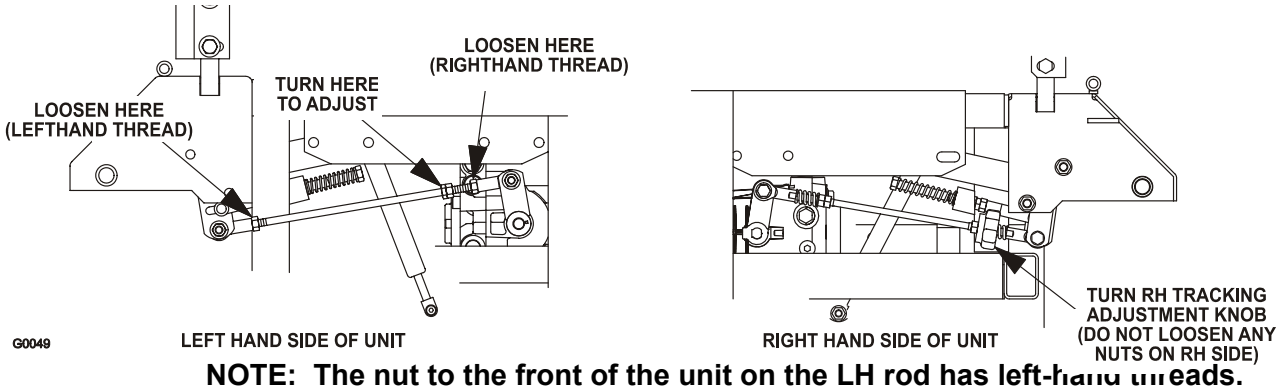

NOTE: The nut to the front of the unit on the LH rod has left-hand threads.

FIGURE 17
MOTION CONTROL ADJUSTMENT

f) Start engine. ***Brake must be engaged and motion control levers out to start engine. Operator does not have to be in the seat because of the jumper wire being used.*** Run engine at full throttle and release brake.

g) The reverse indicator spring must be correct before the following adjustments can be made. See Section 5.2.12.

NOTE: The motion control lever needs to be in neutral while making any necessary adjustments.

The left rod assembly controls the left wheel and the right rod assembly controls the right wheel.

h) Bring the LH motion control lever into the neutral position. Adjust LH pump control rod length by rotating the double nuts on the rod in the appropriate direction until the wheels slightly creep in reverse. (See Figure 17) Move the motion control lever to the reverse position and while applying slight pressure to the lever allow the reverse indicator spring to bring the levers back to neutral. The wheel must stop turning or slightly creep in reverse. When adjustment is complete, tighten lock nuts onto ball joints.

i) Bring the RH motion control lever into the neutral position. Adjust the RH pump control rod length by rotating the tracking adjustment knob in the appropriate direction until the wheels slightly creep in reverse. Move the motion control lever to the reverse position and while applying slight pressure to the lever allow the reverse indicator spring to bring the levers back to neutral. The wheel must stop turning or slightly creep in reverse. See Figure 17.

j) Shut off unit. Remove jumper wire from wire harness connector and plug connector into seat switch.

5.2.14 <u>Caster pivot bearings pre-load adjustment</u>.

a) Remove dust cap from caster and tighten nyloc nut until washers are flat and back off 1/4 of a turn to properly set the pre-load on the bearings. If disassembled, make sure the spring washers are reinstalled as shown in Figure 18.

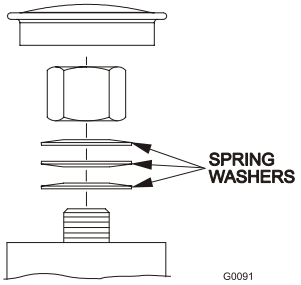

FIGURE 18
CASTER ADJUSTMENT

5.2.15 Seat armrest adjustment.

a) Lift armrest on seat. Locate square tab marked with the numbers 1 through 4. Rotate square tab 1/4 turn to raise or lower the armrest in approximately 1/4" (6.4 mm) increments. See Figure 19.

FIGURE 19
ARMREST ADJUSTMENT

6. WASTE DISPOSAL

6.1 MOTOR OIL DISPOSAL

Engine oil and hydraulic oil are both pollutants to the environment. Dispose of used oil at a certified recycling center or according to your state and local regulations.

6.2 MERCURY SWITCH DISPOSAL

⚠ CAUTION
POTENTIAL HAZARD ♦ The mercury contained in the tilt switch is poisonous.
WHAT CAN HAPPEN ♦ Exposure to mercury can cause severe illness.
HOW TO AVOID THE HAZARD ♦ Never attempt to open or repair the tilt switch ♦ Avoid contact with the mercury.

The tilt switch (PN 1-633782) on this unit contains mercury, a hazardous material. Mercury that is outside a sealed container vaporizes at room temperature. The vapors are harmful. Mercury can be absorbed through the skin. Do not attempt to open or repair this switch.

A very small amount of mercury is contained in a hermetically sealed body. The steel switch is then potted in a hard epoxy in a plastic case. It is unlikely that the mercury will ever escape from the enclosure. These high performance and reliable inexpensive switches are recyclable. Mercury is an important and beneficial compound but requires special care in handling and disposal. When used and managed properly, mercury is not a threat to people or the environment. This information is presented to users so that they are aware that these switches contain mercury and will apply sound disposal practices when these devices reach their normal end of life or are damaged.

Several states have passed laws concerning the disposal of devices containing mercury. In all the remaining states it is advisable to follow similar procedures. The laws state that these sealed devices contain mercury and should not be placed in the garbage until the mercury is removed and reused, recycled or otherwise managed to insure that it does not become part of solid waste or waters. Management and disposal practices must be within relevant federal, state, or local laws.

Return the switch to your Exmark dealer if it is faulty and is being replaced or if the unit containing the switch is no longer operating and is being scrapped. If the switch is damaged or broken open use extreme caution in handling. Call your local waste management authority or Exmark Customer Service for instructions.

6.3 BATTERY DISPOSAL

⚠ DANGER
POTENTIAL HAZARD ♦ Battery electrolyte contains sulfuric acid, which is poisonous and can cause severe burns
WHAT CAN HAPPEN ♦ Swallowing electrolyte can be fatal or if it touches skin can cause severe burns.
HOW TO AVOID THE HAZARD ♦ Wear safety glasses to shield eyes, and rubber gloves to protect skin and clothing when handling electrolyte. ♦ Do not swallow electrolyte.

Federal law states that batteries should not be placed in the garbage. Management and disposal practices must be within relevant federal, state, or local laws.

If a battery is being replaced or if the unit containing the battery is no longer operating and is being scrapped, take the battery to a local certified recycling center. If no local recycling is available return the battery to any certified battery reseller.

7. TROUBLE SHOOTING

7.1 MOWER PULLS LEFT OR RIGHT (W/LEVERS FULLY FORWARD).

a) Refer to Tracking Adjustment Section 4.1.3.

b) Check air pressure in tires; 13 psi/drive, 13 psi/pneumatic casters.

c) Check reverse indicator and motion control linkage adjustment. See section 5.2.12 and 5.2.13.

7.2 MOWER CUTS UNEVENLY.

a) Check air pressure in tires; 13 psi/drive, 13 psi/pneumatic casters.

A more uniform cutting height may be obtained with higher tire pressure on rough terrain.

A lower tire pressure provides more flotation. Higher pressures in front casters may cause them to shimmy on hard surfaces.

b) Check deck support chains.

c) Check deck leveling (See Adjustments Section 5.2.2.)

Note: The front of the mower deck will be approximately 1/4” lower than the back of the mower deck. This is the “rake” of the deck.

d) Check blades tip to tip for straightness (they should be within 3/16" or one blade width from being in line.)

7.3 ENGINE WILL NOT START.

a) Make sure the battery has a full charge. See section 5.1.3 for charging instructions.

b) Be sure the throttle control is midway between the “SLOW” and “FAST” positions, and the choke is in the “ON” position for a cold engine or the “OFF” position for a warm engine.

c) Make sure there is fuel in the fuel tank and that the fuel valve is open.

d) Be sure the seat switch is properly adjusted. See Section 5.2.6.

e) Make sure the parking brake is set and motion control levers are moved out (neutral lock position).

f) Check that the PTO is disengaged.

g) Check that the spark plug wires are properly connected.

h) Check for loose or faulty wiring connections.

i) Check for corrosion at all wiring connections. Even minor corrosion may cause a faulty connection. Clean connector terminals thoroughly with electrical contact cleaner, apply dielectric grease and reconnect.

NOTE: When disconnecting electrical connectors *DO NOT* pull on the wires to separate the connectors.

NOTE: After carefully checking the above steps, attempt to start the engine. If it does not start, contact your authorized Exmark service dealer.

IMPORTANT: It is essential that all operator safety mechanisms be connected and in proper operating condition prior to mower use.

When a problem occurs, do not overlook the simple causes. For example: starting problems could be caused by an empty fuel tank.

The following table lists some of the common causes of trouble. Do not attempt to service or replace major items or any items that call for special timing of adjustments procedures (such as valves, governor, etc.). Have this work done by your **Engine Service Dealer.**

ENGINE TROUBLESHOOTING TABLE

PROBLEM	NO FUEL	IMPROPER FUEL	DIRT IN FUEL LINE	DIRTY AIR FILTER	FAULTY SPARK PLUG	ENGINE OVERLOADED	BLOCKED FUEL FILTER	INCORRECT OIL LEVEL	DIRTY AIR SCREEN	INSUFFICIENT BATTERY CHARGE
Will not start	X		X	X	X	X	X			X
Hard starting	X	X	X	X	X	X	X			
Stops suddenly	X		X	X		X	X	X	X	
Lacks power		X	X	X	X	X	X	X	X	
Operates erratically		X	X	X	X	X	X		X	
Knocks or pings		X				X			X	
Skips or misfires		X	X	X	X				X	
Backfires			X	X	X	X			X	
Overheats*			X	X		X		X	X	
High fuel consumption				X	X	X			X	

8. ELECTRICAL DIAGRAM

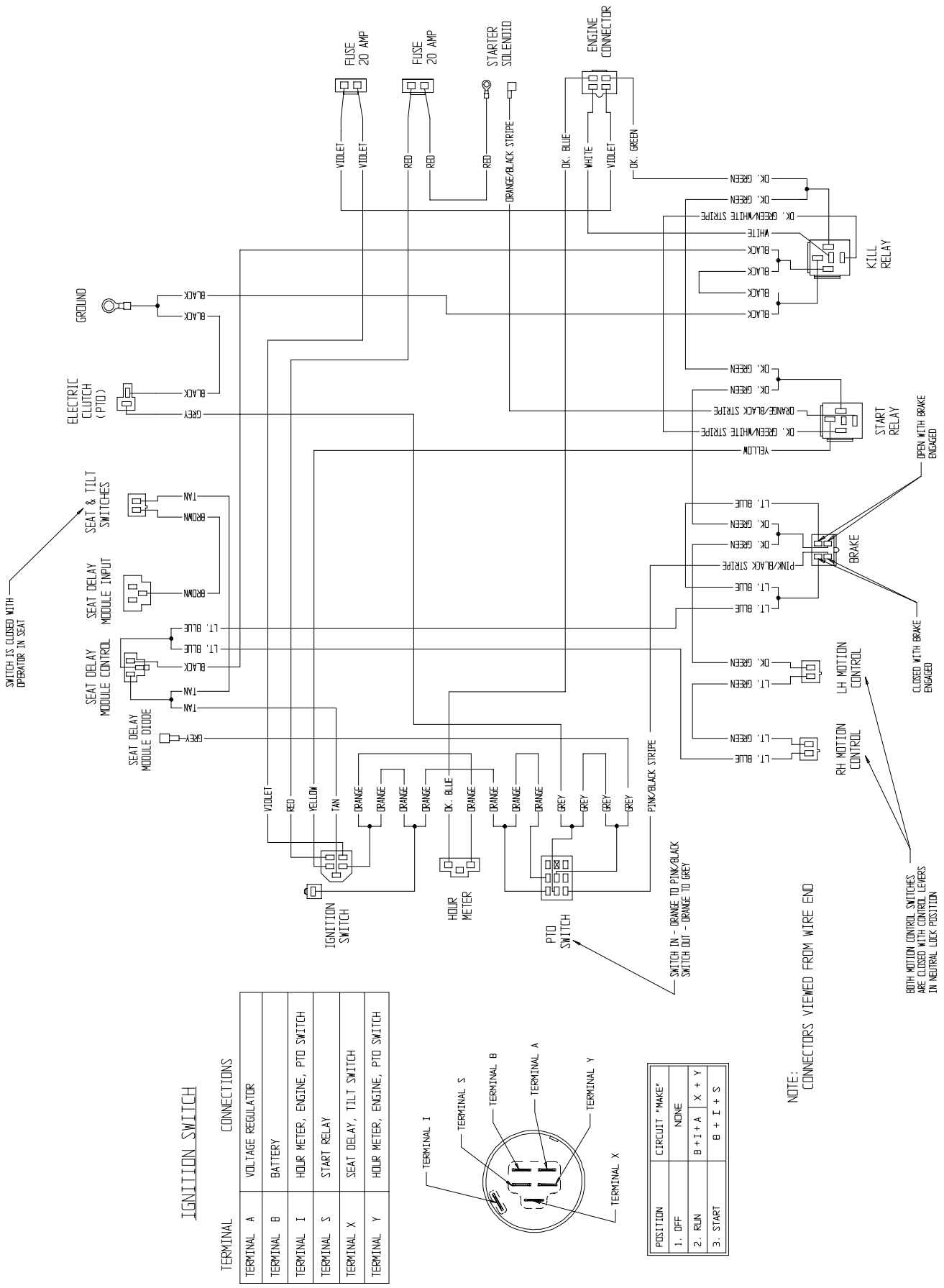

9. HYDRAULIC DIAGRAM

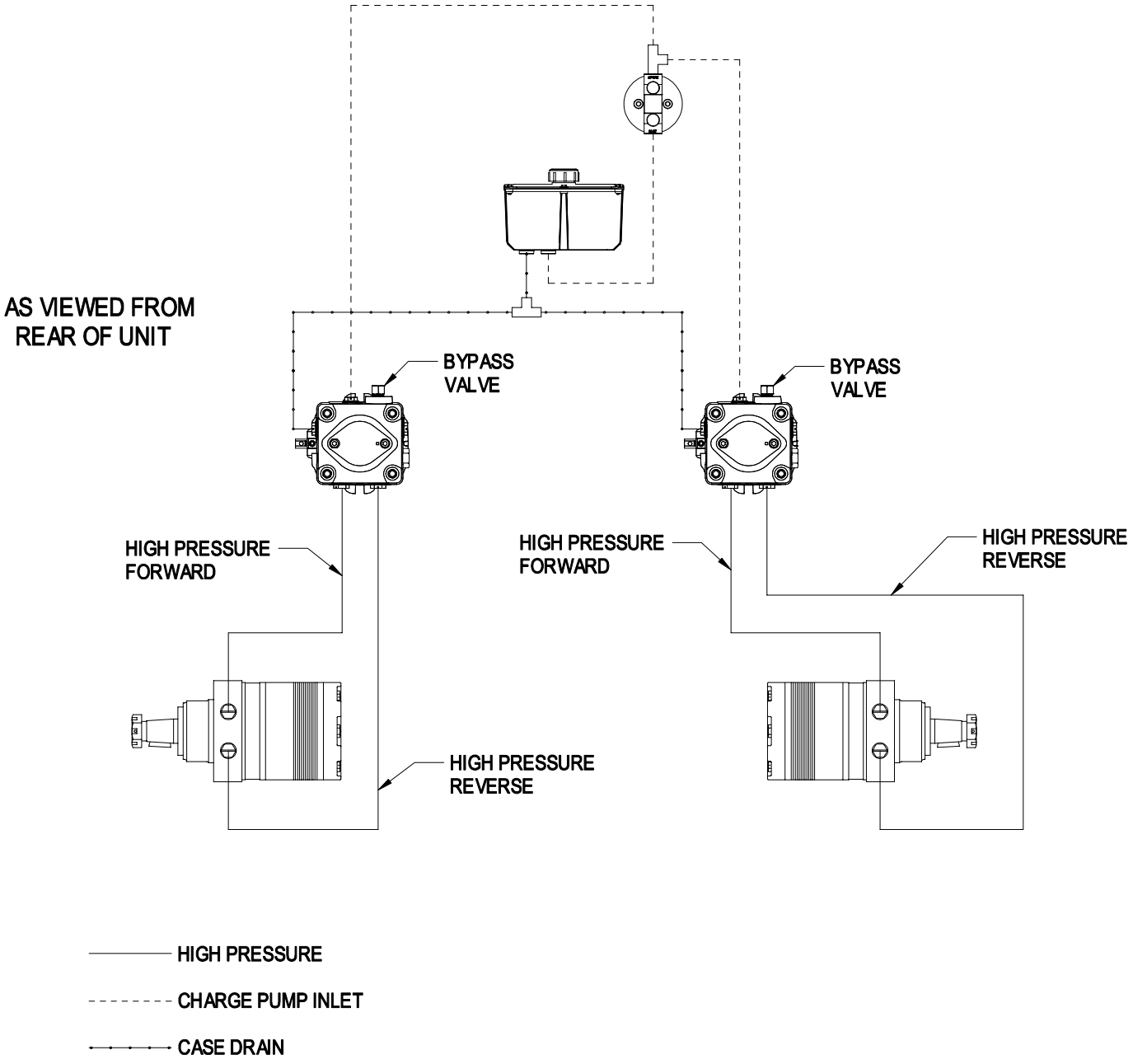

10. Limited Warranty
Exmark Turf Equipment

Conditions and Products Covered

Exmark Mfg. Co. Inc. and its affiliate, Exmark Warranty Company, pursuant to an agreement between them, jointly warrant on the terms and conditions herein, that we will repair, replace or adjust any part manufactured by Exmark and found by us (in the exercise of our reasonable discretion) to be defective in factory materials or workmanship.

This warranty applies to Exmark turf equipment sold in the US or Canada. This warranty may only be assigned or transferred to a second (or third) owner by an authorized Exmark dealer. The warranty period commences upon the date of the original retail purchase.

Products	Warranty Period
• All Products (except as noted below)	1 year (90 days for rental use)
• Peerless 5-speed transmission (extended beyond manufacturer's warranty of 90 days)	1 year
• Frame, Hydrostatic Traction System, Electric Clutch and Exmark supplied Mufflers	2 years
• Blade Spindle Assy and Deck Jackshaft Assy (1 year parts and labor, with additional 2 years parts only)	3 years
• Belts and Tires	90 days
• Battery	Refer to the battery manufacturer's warranty in the literature packet
• Engine*	Warranty is covered by engine manufacturer

*Please refer to the engine manufacturer's warranty statement that is included in the literature packet. We are not authorized to handle warranty adjustments on engines.

This warranty only includes the cost of parts and labor.

Items and Conditions Not Covered

This warranty does not cover the following:

- Pickup and delivery charges to and from any authorized Exmark Service Dealer.
- Any damage or deterioration due to normal use, wear and tear, or exposure.
- Cost of regular maintenance service or parts, such as filters, fuel, lubricants, tune-up parts, and adjustments.
- Any product or part which has been altered or misused or required replacement or repair due to normal wear, accidents, or lack of proper maintenance.
- Any repairs necessary due to use of parts, accessories or supplies, including gasoline, oil or lubricants, incompatible with the turf equipment or other than as recommended in the operator's manual or other operational instructions provided by Exmark.

All warranty work must be performed by an authorized Exmark Service Dealer using Exmark approved replacement parts.

Instructions for Obtaining Warranty Service

1. Contact any Exmark Service Dealer to arrange service at their dealership. To locate a dealer convenient to you, access our website at www.exmark.com. U.S. Customers may also call 402-223-6375.
2. Bring the product and your proof of purchase (sales receipt) to the Exmark Service Dealer.

If for any reason you are dissatisfied with the Service Dealer's analysis or with the assistance provided, contact us at:

Exmark Customer Service Department
The Exmark Warranty Company
2101 Ashland Avenue
Beatrice, NE 68310
402-223-6375 or
service@exmark.com

Owner's Responsibilities

The Exmark turf equipment, including any defective part, must be returned to an authorized Exmark service dealer within the warranty period. This warranty extends only to turf equipment operated under normal conditions. You must properly service and maintain your Exmark product as described in the operator's manual. Such routine maintenance, whether performed by a dealer or by you, is at your expense.

As a condition to this warranty, customer shall have read the operator's manual and shall have completed and submitted to Exmark Warranty Company, within the prescribed time, the Exmark warranty registration.

General Conditions

The sole liability of Exmark and Exmark Warranty Company with respect to this warranty shall be repair and replacement as set forth herein. **Neither Exmark nor Exmark Warranty Company shall have any liability for any other cost, loss or damage, including but not limited to, any incidental or consequential loss or damage.**

In particular, we shall have no liability or responsibility for:

- Expenses related to gasoline, oil or lubricants.
- Travel time, overtime, after hours time or other extraordinary repair charges or charge relating to repairs or replacements outside of normal business hours at the place of business of the authorized Exmark service dealer.
- Rental of like or similar replacement equipment during the period of any warranty, repair or replacement work.
- Any telephone or telegram charges or travel charges.
- Loss or damage to person or property other than that covered by the terms of this warranty.
- Any claims for lost revenue, lost profit or additional cost as a result of a claim of breach of warranty.
- Attorney's fees.

No Claim of breach of warranty shall be cause for cancellation or rescission of the contract of sale of any Exmark mower.

There are no understandings, agreements, representations, or warranties, express or implied, including but not limited to any regarding the merchantability (that product is fit for ordinary use) or fitness for use (that product is fit for a particular purpose), not specified herein, respecting the equipment which is the subject of this warranty.

Some states do not allow exclusions of incidental or consequential damages, or limitations on how long an implied warranty lasts, so the above exclusions and limitations may not apply to you.

This warranty gives you specific legal rights, and you may also have other rights which vary from state to state.

SERVICE RECORD

Date	Description of Work Done Service Done By

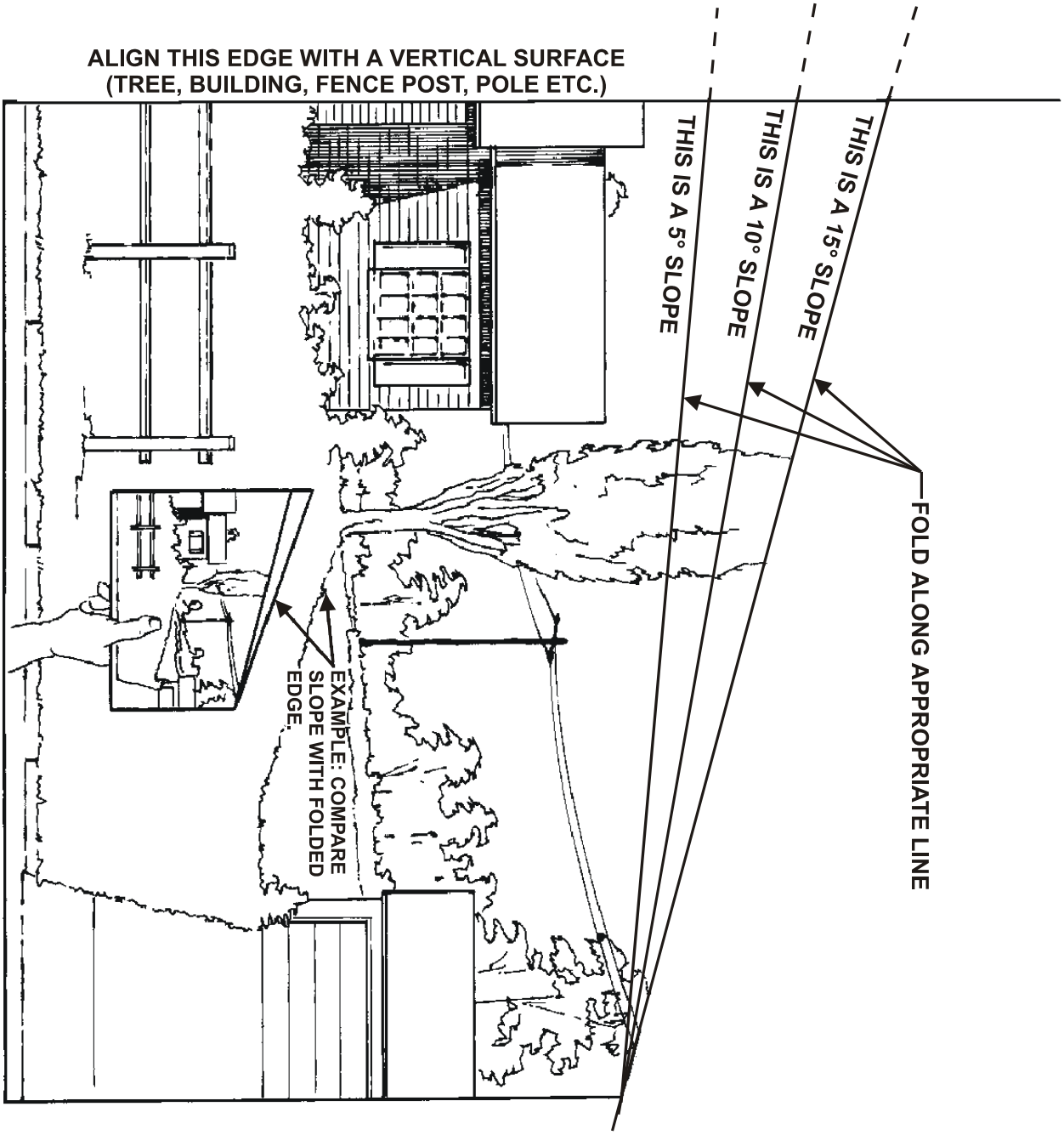
FOLD ALONG APPROPRIATE LINE
THIS IS A 15° SLOPE
THIS IS A 10° SLOPE
THIS IS A 5° SLOPE
ALIGN THIS EDGE WITH A VERTICAL SURFACE
(TREE, BUILDING, FENCE POST, POLE ETC.)
EXAMPLE: COMPARE
SLOPE WITH FOLDED
EDGE.

SEE EXMARK'S COMPLETE LINE OF PRODUCTS FOR TURF CARE

LAZER Z®	LAZER Z® HP
LAZER Z® XP	LAZER Z® CT
TURF RANGER®	VIKING HYDRO
TURF TRACER®	TURF TRACER® HP
METRO®	METRO® HP
ULTRA VAC™	ULTRA VAC™ QDS
GRASS CATCHER	SELF STEERING SULKY

MICRO-MULCH ™ ACCESSORY

⚠ WARNING

The engine exhaust from this product contains chemicals known to the State of California to cause cancer, birth defects, or other reproductive harm.

©1997-2003
EXMARK MFG. CO. INC.
INDUSTRIAL PARK BOX 808
BEATRICE, NE 68310
ALL RIGHTS RESERVED

PART NO. 103-5503 Rev. A
(402) 223-6300
FAX (402) 223-5489

PRINTED IN U.S.A.

eXmark® MFG. CO. INC.