For Serial Nos.
115,000 and Higher

Lazer Z

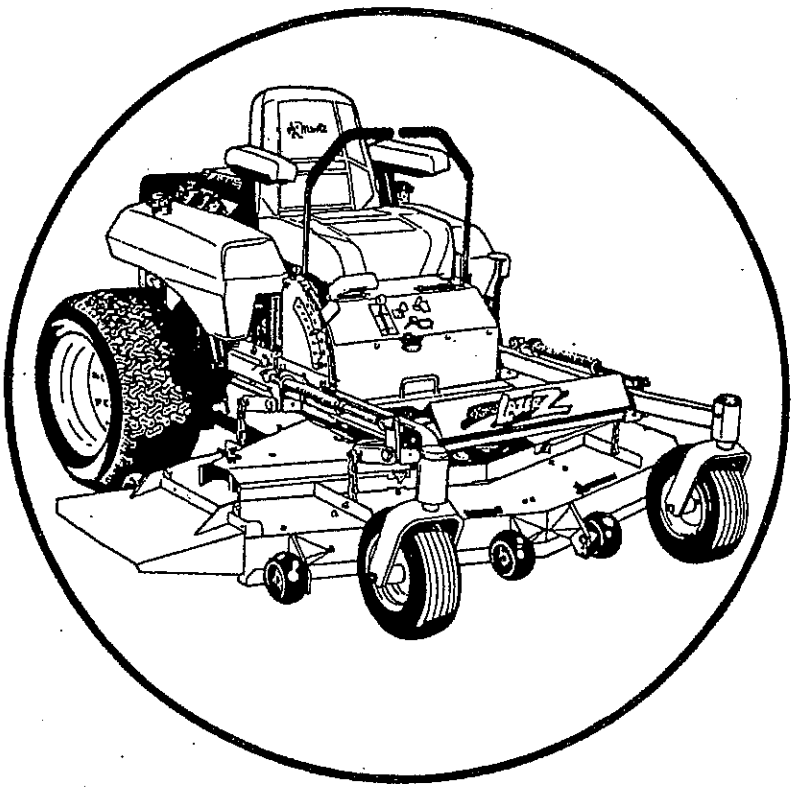

Operator's Manual

Part No. 850388

⚠ WARNING

FAILURE TO FOLLOW CAUTIOUS OPERATING PRACTICES CAN RESULT IN SERIOUS OPERATOR INJURY.

⚠ CAUTION

1. Keep all shields, guards and safety devices (especially grass discharge system) in place and in proper working condition.
2. Stop engine and remove spark plug wire(s) or remove key before adjusting, servicing, or preforming maintenance.
3. When mower deck becomes clogged, stop engine and remove spark plug wire(s) or remove key before cleaning blockage.
4. Keep hands, feet, and clothing away from power-driven parts.
5. Keep off mower unless seat or platform is provided.
6. Keep others off mower.

⚠ WARNING

The engine exhaust from this product contains chemicals known to the State of California to cause cancer, birth defects or other reproductive harm.

⚠ HEALTH WARNING

GASOLINE

Harmful or fatal if swallowed.
Long-term exposure to vapors has caused cancer in laboratory animals.

- **Avoid prolonged breathing of vapors.**
- **Keep face away from nozzle and gas tank/container opening.**
- **Keep away from eyes and skin.**
- **Never siphon by mouth.**

Failure to use caution may cause serious injury or illness.

Exmark reserves the right to make changes or add improvements to its products at any time without incurring any obligation to make such changes to products manufactured previously. Exmark, or its distributors and dealers, accept no responsibility for variations which may be evident in the actual specifications of its products and the statements and descriptions contained in this publication.

CONGRATULATIONS on the purchase of your Exmark Mower. This product has been carefully designed and manufactured to give you a maximum amount of dependability and years of trouble-free operation.

OPERATOR'S MANUAL

This manual contains assembly, operating, maintenance, adjustment and safety instructions for your Exmark mower. **BEFORE OPERATING YOUR MOWER, CAREFULLY READ THIS MANUAL IN ITS ENTIRETY.** By following the operating, maintenance and safety instructions, you will prolong the life of your mower, maintain its maximum efficiency and promote safe operation.

If additional information is needed, or should you require trained mechanic service, contact your authorized Exmark equipment dealer or distributor.

All Exmark equipment dealers and distributors are kept informed of the latest methods of servicing and are equipped to provide prompt and efficient service in the field or at their service stations. They carry ample stock of service parts or can secure them promptly for you from the factory.

All Exmark parts are thoroughly tested and inspected before leaving the factory, however, attention is required on your part if you are to obtain the fullest measure of satisfaction and performance.

If you need to order replacement parts from your dealer, always give the model number and serial number of your mower as well as the quantity, part number and description of the part needed.

The Serial No. Plate of the tractor is located on the right side of the console. We suggest you record the numbers below for ready reference.

Model No._____

Serial No._____

Date Purchased_____

Purchased From_____

1. SAFETY ..... PAGE

1.1 Safety Alert Symbol 1
1.2 Training 1
1.3 Preparation 1
1.4 Operation 2
1.5 Maintenance & Storage 4
1.6 Safety Signs 5

2. SPECIFICATIONS

2.1 Model Number 9
2.2 Engine 9
2.3 Fuel System 9
2.4 Electrical System 9
2.5 Operator Controls 10
2.6 Seat 10
2.7 Hydrostatic Ground Drive System 10
2.8 Tires & Wheels 11
2.9 Cutting Deck 11
2.10 Dimensions 12

3. ASSEMBLY INSTRUCTIONS

3.1 Uncrate Mower 12
3.2 Install Drive Wheels 12
3.3 Check Tire Pressure 12
3.4 Install Seat Retaining Rod 12
3.5 Install Motion Control Levers 13
3.6 Position Discharge Chute 13
3.7 Service Engine 13
3.8 Service Battery 14

4. OPERATION INSTRUCTIONS

4.1 Controls 14
4.2 Pre-Start 17
4.3 Mowing 17
4.4 Transporting 18

5. MAINTENANCE & ADJUSTMENTS

5.1 Periodic Maintenance 18
5.2 Adjustments 26

6. TROUBLE SHOOTING 33

7. WIRING DIAGRAM 37

8. HYDRAULIC DIAGRAM 38

9. WARRANTY 39

1. SAFETY

1.1 SAFETY ALERT SYMBOL

THIS SAFETY ALERT SYMBOL ⚠ IS USED BOTH IN THIS MANUAL AND ON THE MACHINE TO IDENTIFY IMPORTANT SAFETY MESSAGES WHICH MUST BE FOLLOWED TO AVOID ACCIDENTS. THIS ALERT SYMBOL MEANS:

ATTENTION! BECOME ALERT!

YOUR SAFETY IS INVOLVED!

The safety alert symbol appears above information which alerts you of unsafe actions or situations and will be followed by the word DANGER, WARNING, or CAUTION.

When used with the word DANGER: IT DENOTES THAT AN EXTREME HAZARD EXISTS WHICH WOULD RESULT IN HIGH PROBABILITY OF DEATH OR IRREPARABLE INJURY IF PROPER PRECAUTIONS ARE NOT TAKEN.

When used with the word WARNING: IT DENOTES THAT A HAZARD EXISTS WHICH CAN RESULT IN INJURY OR DEATH IF PROPER PRECAUTIONS ARE NOT TAKEN.

When used with the word CAUTION: IT DENOTES A REMINDER OF SAFETY PRACTICES OR DIRECTS ATTENTION TO UNSAFE PRACTICES WHICH COULD RESULT IN PERSONAL INJURY IF PROPER PRECAUTIONS ARE NOT TAKEN.

1.2 TRAINING

1.2.1 Regard the Exmark mower as a piece of power equipment and teach this regard to all who operate this unit.

1.2.2 Read the instructions carefully. Familiarize yourself with the controls and the proper use of the equipment.

1.2.3 Never allow children, teenagers, or people unfamiliar with these instructions to use the mower.

1.2.4 Avoid mowing while people, especially children or pets, are nearby. Keep in mind that the operator or user is responsible for accidents or hazards occurring to other people or their property.

1.3 PREPARATION

1.3.1 The use of personal protective equipment, such as (but not limited to) protection for the eyes, ears, feet and head is recommended.

1.3.2 While mowing, always wear substantial footwear and long trousers. Do not operate equipment when barefoot or when wearing open sandals.

1.3.3 Thoroughly inspect the area where the equipment is to be used and remove all stones, sticks, wires, bones and other foreign objects which may damage the equipment or cause personal injury to the operator or bystanders.

⚠ DANGER

- *DO NOT* operate the engine in a small confined area where dangerous carbon monoxide fumes can collect.

⚠ WARNING

- Fuel is *Highly Flammable*. *DO NOT* smoke while refueling. Refuel only in a well ventilated area, or refuel outdoors.
- Store fuel in containers specifically designed for this purpose.
- Add fuel before starting the engine. *Never* remove the cap of the fuel tank or add fuel when engine is running or when the engine is hot.
- If fuel is spilled, *DO NOT* attempt to start the engine. Move away from the area of the spill and avoid creating any source of ignition until fuel vapors have dissipated.

1.4 OPERATION

1.4.1 Give complete, undivided attention to the job at hand.

1.4.2 Mow only in daylight or good artificial light.

1.4.3 When feasible, avoid operating the equipment in wet grass.

1.4.4 Mow ***up and down*** slopes. Use extreme caution when mowing and/or turning on slopes. ***Do Not*** mow excessively steep slopes ***(tractor could tip backward*** **going up excessively steep slopes).**

1.4.5 Use extreme caution when backing up.

1.4.6 Stop the blades when crossing surfaces other than grass; and when transporting the mower to and from the area to be mowed.

1.4.7 Never operate the mower with defective guards, shields, or without safety devices in place and in proper working condition.

1.4.8 ***Do Not*** change the engine governor settings or overspeed. the engine. Operating an engine at excessive speed may increase the hazard of personal injury.

1.4.9 Disengage blade drive before starting engine.

1.4.10 Start the engine carefully with feet well away from the blades.

1.4.11 Keep hands, feet and clothing away from rotating parts while the mower is being operated.

1.4.12 Stop the engine and remove ignition key:

- Before checking, cleaning or working on the mower.
- After striking a foreign object (inspect the mower for damage and make repairs before restarting and operating the mower).
- Before clearing blockages.
- Whenever you leave the mower.

Stop the engine:

- Before refueling.
- Before dumping the grass catcher.

1.4.13 Before stopping the engine, return the throttle control to the idle position for 30 seconds to allow the engine to cool down.

1.4.14 The fuel system is provided with a shut-off valve. The fuel shut-off valve is used to shut off the fuel:

- When the machine will not be used for a few days.
- During transport to and from the job.
- When parked inside a building.

1.4.15 This mower was designed for one operator only. Keep all others away from mower during operation.

1.4.16 *Do Not* mow without the grass deflector in place.

1.4.17 *Do Not* operate machine unless all guards, shields and covers are in place and in proper working condition.

⚠ CAUTION

- **Failure to follow safety instructions and cautious operating practices can result in serious injury.**

1.4.18 If jump starting is required:

a) connect the positive (+) power cable from the booster battery to the positive terminal post on the starter solenoid switch (this post has the positive battery cable attached to it).

b) connect the negative or ground cable (-) to the negative post from the booster battery to any engine deck ground, preferably the engine block as far away from the battery as possible.

c) disconnect battery cables in the reverse order after starting.

⚠ CAUTION

- Although hazard control and accident prevention partially are dependent upon the design and configuration of the equipment, these factors are also dependent upon the awareness, concern, prudence and proper training of the personnel involved in the operation, transport, maintenance and storage of the equipment. It is essential that all Operator Safety Mechanisms be connected and in operating condition prior to use for mowing.

1.5 MAINTENANCE AND STORAGE

1.5.1 For engine maintenance, follow the engine manufacture's recommendations precisely as stated in the engine manual.

1.5.2 If carburetor adjustment is necessary, stand to one side and keep feet and hands clear while making adjustments.

1.5.3 Keep engine and engine area free from accumulation of grass, leaves, excessive grease or oil and other debris which can accumulate in these areas. These materials can become combustionable and may result in a fire.

1.5.4 Store fuel in a container specifically designed for this purpose in a cool, dry place.

1.5.5 Keep the mower and fuel container in locked storage to prevent children from playing or tampering with them.

1.5.6 Gasoline powered equipment or fuel containers should not be stored in a basement or any enclosed area, where open pilot lights or heat appliances are present.

1.5.7 Maximum mowing results and safety can only be achieved if the mower is properly maintained and operated correctly.

1.5.8. Check all bolts frequently to maintain proper tightness.

1.5.9. Keep all guards, shields and all safety devices in place and in safe working condition.

1.5.10 Frequently check for worn or deteriorating components that could create a hazard.

1.5.11 All replacement parts must be the same as or equivalent to the parts supplied as original equipment.

⚠ CAUTION

- Make sure all hydraulic fluid hoses and lines are in good condition and all hydraulic connections and fittings are tight before applying pressure to hydraulic system.

⚠ CAUTION

- Hydraulic fluid escaping under pressure may have sufficient force to penetrate skin and cause serious injury. If foreign fluid is injected into the skin, it must be surgically removed within a few hours by a doctor familiar with this type of injury or gangrene may result.

⚠ CAUTION

- Keep body and hands away from pin holes or nozzles that eject hydraulic fluid under high pressure. Use paper or cardboard, *NOT HANDS* to search for leaks.

⚠ CAUTION

- Safely relieve all pressure in the hydraulic system before disconnecting lines or before performing any work on the hydraulic system.

1.6 SAFETY SIGNS

1.6.1 Keep all safety signs legible. Remove all grease, dirt and debris from safety signs and instructional labels.

1.6.2 Safety signs must be replaced if they are missing or illegible.

1.6.3 When new components are installed, be sure that current safety signs are affixed to the replaced components.

1.6.4 New safety signs may be obtained from your authorized Exmark equipment dealer or distributor or from Exmark Mfg. Co. Inc.

1.6.5 Safety signs may be affixed by peeling off the backing to expose the adhesive surface. Apply only to a clean, dry surface. Smooth to remove any air bubbles.

1.6.6 Familiarize yourself with the following safety signs and instruction labels. They are critical to the safe operation of your Exmark commercial mower.

⚠ WARNING 513747

BATTERY CONTAINS SULFURIC ACID, AVOID CONTACT AND ALWAYS SHIELD EYES, FACE, SKIN AND CLOTHING FROM BATTERY. CIGARETTES, FLAMES OR SPARKS COULD CAUSE BATTERY TO EXPLODE. DO NOT CHARGE OR USE BOOSTER CABLES OR ADJUST POST CONNECTIONS WITHOUT PROPER TRAINING. IN EVENT OF AN ACCIDENT FLUSH WITH WATER AND CALL A PHYSICIAN IMMEDIATELY. KEEP OUT OF REACH OF CHILDREN.

PART NO.
513747

LOCATION: Top Center of Console
Under Front of Seat

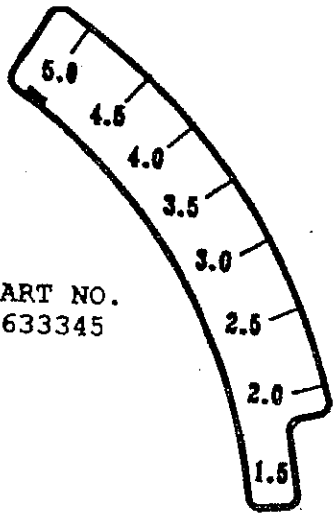

PART NO. 633345

LOCATION: Righthand Side of Cutting Height Adjustment Plate

PART NO. 303293

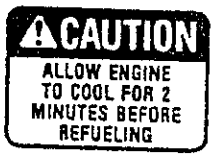

LOCATION: On Top of Fuel Tanks

PART NO. 633354

LOCATION: Top of Console Left and Right Side

PART NO. 543774

LOCATION: Righthand Side On Front of Console

PART NO. 633390

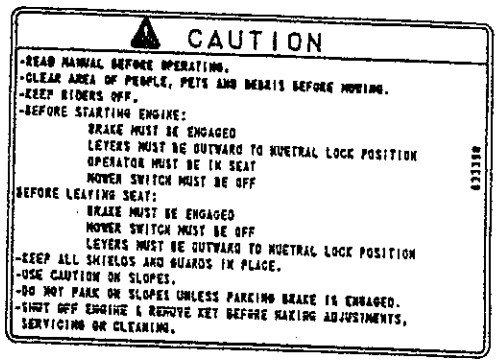

LOCATION: Lefthand Side on Front of Console

PART NO. 513890

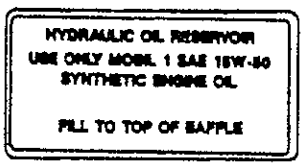

LOCATION: Top of Hydraulic Reservoir Under the Seat

PART NO. 303481

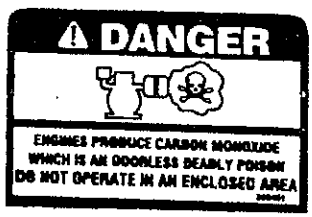

LOCATION: Righthand Side On Front of Console

PART NO. 633313

LOCATION: Righthand Side On Top Front of Mower Deck

PART NO. 303508

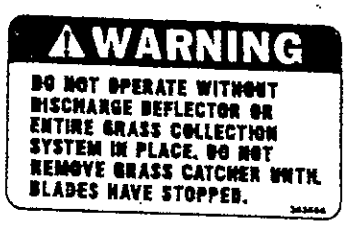

LOCATION: Righthand Side On Top Rear of Mower Deck

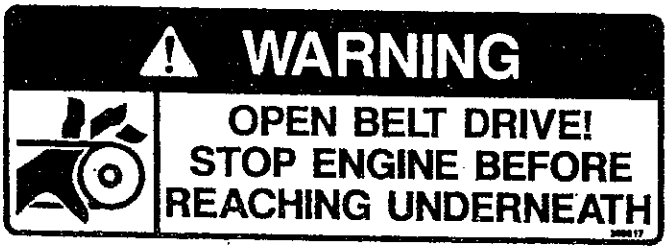

LOCATION: Rubber Heat Shield Flap Behind Seat

PART NO. 303517

LOCATION: On Hydraulic Reservoir Mounting Bracket, Under the Seat

PART NO. 513929

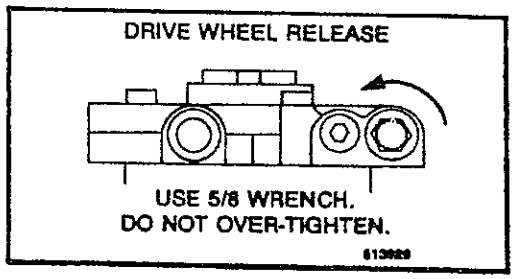

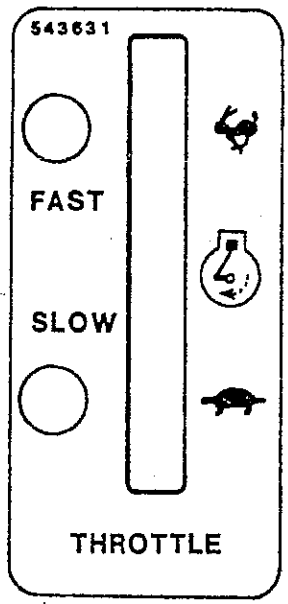

PART NO. 543631

LOCATION: Console Front W/Throttle Lever

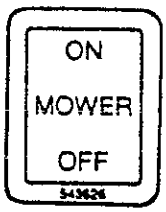

LOCATION: Console Front, Left of Blade Engagement Switch

PART NO. 543626

LOCATION: Front Lefthand Side of Console

PART NO. 633391

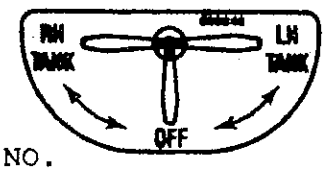

PART NO. 633346

LOCATION: Below Center of Console

IMPORTANT:
BEFORE STARTING ENGINE CLEAN GRASS FROM PUMP DRIVE BELT COMPARTMENT. CHECK MORE OFTEN IN DRY CONDITIONS

PART NO. 633462

LOCATIONS:
- Console behind ignition switch
- Rubber Heat Shield Flap Behind Seat

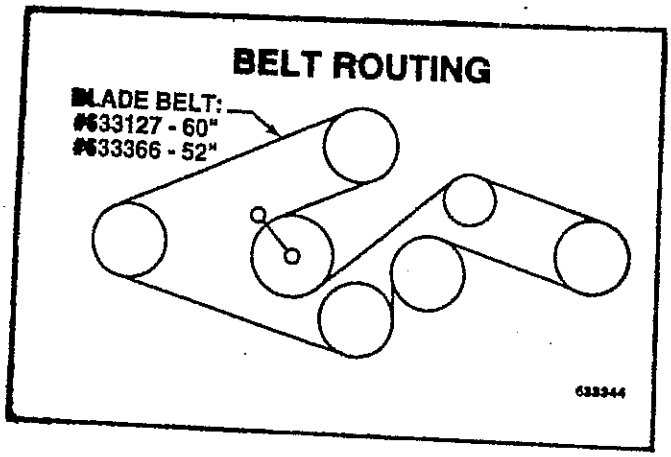

PART NO.
633344

LOCATION: Left of Center On Mower Deck, Under Floor Pan

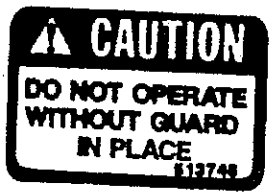

PART NO.
513748

LOCATION: Rubber Heat Shield Behind Seat

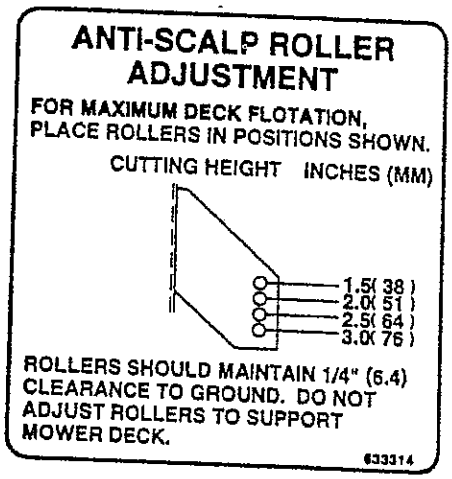

PART NO.
633314

LOCATION: Front Center on Top of Mower Deck

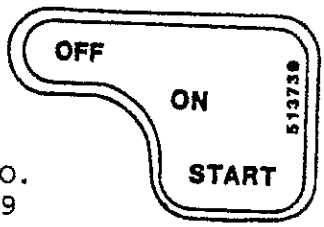

PART NO.
513739

LOCATION: Front, Center of Console W/Ignition Switch

PART NO.
513742

LOCATION: On Top of Mower Deck Belt Shields, Left and Right Sides

LOCATION: Left and Right Corners of Mower Deck

PART NO.
403005

2. SPECIFICATIONS

2.1 MODEL NUMBER: LZ-22KC52; LZ-22KC60; LZ-25KC52; LZ25KC60

2.2 ENGINE:

2.2.1 Manufacturer: Kohler

2.2.2 Model Number: CH22S / CH25S

2.2.3 Power: 22 HP (16.4 kW) @ 3600 RPM; 25 HP (18.4 kW) @ 3600 RPM

2.2.4 Cooling: Air

2.2.5 Cylinders: Two

2.2.6 Cycle: Four, overhead valve

2.2.7 Crankshaft Alignment: Horizontal

		22 HP	25 HP
2.2.8	Bore:	3.03 in. (77 mm)	3.27 in. (83 mm)
2.2.9	Stroke:	2.64 in. (67 mm)	2.64 in. (67 mm)
2.2.10	Displacement:	38 cu. in. (624 cc)	44 cu. in. (725 cc)
2.2.11	Compression Ratio:	8.5:1	9:1
2.2.12	Oil Capacity:	2.0 qt. (1.9 L.) with filter	2.1 qt. (2.0 L.) with filter

2.2.13 Oil Type: SAE 10W-30 or 10W-40 API service class SF or SG for temperatures above 0° F (-18° C).

2.2.14 Oil Filter: Replaceable cartridge type.

2.2.15 Air Filter: Dry cartridge type with foam precleaner.

2.2.16 RPM: 3600 (No Load)

2.2.17 Idle RPM: 1500

2.3 FUEL SYSTEM

2.3.1 Capacity: 9 gal. (34 L.)

2.3.2 Type of Fuel: Regular ***unleaded*** gasoline, 87 octane or higher

2.3.3 Fuel Filter: Replaceable in-line 15 Micron **Kohler** P/N 2405002.

2.3.4 Fuel Shut-Off Valve: 1/4 turn increments (left tank, "OFF", right tank)

2.4 ELECTRICAL SYSTEM

2.4.1 Ignition: Smart-Spark, improved starting, fuel efficiency, power and fewer emissions.

2.4.2 Charging System: Flywheel Alternator

2.4.3 Charging Capacity: 15 amp

2.4.4 Battery Type: BCI Group U1

2.4.5 Battery Voltage: 12 Volt

2.4.6 Polarity: Negative Ground

2.4.7 Fuses: Two 20 amp blade type

2.4.8 Safety Interlock System: Operator must be in seat with ***Blades disengaged, brake engaged***, and ***motion control levers out*** (neutral lock) ***to start engine***.

Operator must be in seat ***when Blades are engaged, brake is disengaged***, or ***motion control levers are moved in*** or engine will stop.

Engine will stop if either the left, the right, or both levers are ***moved from neutral lock position while brake is engaged***.

2.5 OPERATOR CONTROLS

2.5.1 Steering and Motion Control:

Separate levers on each side of the console control speed and direction of travel of the respective drive wheels.

Steering is controlled by varying the position of the levers relative to each other.

Moving motion control levers outward (in slots) locks drive system in neutral.

2.5.2 Blade Engagement Switch: Engages electric clutch (to drive belt) which engages mower blades.

2.5.3 Parking Brake Lever: Sets brake.

2.5.4 Deck Height Adjustment Lever: Sets cutting height to desired position.

2.6 SEAT

2.6.1 Type: high back, foam padded (internal spring suspension) with standard arm rests.

2.6.2 Mounting: Hinged to tilt up for access to hydraulic pumps, battery and other components. Held in tilted position with prop rod.

Adjustable fore and aft seat track.

2.6.3 Armrests: optional.

2.6.4 Seat Safety Switch: Incorporated into the Safety Interlock System.

Time delay seat switch eliminates rough ground cut-outs.

2.7 HYDROSTATIC GROUND DRIVE SYSTEM

2.7.1 Hydrostatic Pumps: Two Sundstrand/Hydro Gear BDP-10L variable displacement piston pumps.

2.7.2 Wheel Motors: Two Parker/Ross with 1 1/4" tapered shafts.

2.7.3 Hydraulic Oil Type: Synthetic Mobil 1 15W-50.

2.7.4 Hydraulic Oil Capacity: 2.1 qt.(2.0 L.)

2.7.5 Hydraulic Filter: Replaceable cartridge type. Exmark P/N 513211.

2.7.6 Speeds: 0 - 8.5 mph(13.6 km/hr) forward.
0 - 4.0 mph(6.4 km/hr) reverse.

2.7.7 Drive wheel release valves allow machine to be moved when the engine is not running.

2.8 TIRES AND WHEELS

2.8.1 Tires

	Drive	Front Cstr.
Size:	23 x 10.5-12	13 x 5.00-6
Qty:	2	2
Tread:	"Turfmate"	Smooth
Ply:	4	4
Infl:	13 psi (90 kPa)	13 psi (90 kPa)

2.9 CUTTING DECK

2.9.1 Cutting Width: 60 in.(152.4 cm)/ 52 in.(132 cm)

2.9.2 Discharge: Side

2.9.3 Blade Size: (3 ea.) w/52" Deck 18.0 in.(45.7 cm)
w/60" Deck 20.5 in.(52.1 cm)

2.9.4 Blade Spindles: 1-3/16 in.(30.2 mm) diameter spindles with 25 mm I.D. bearings.

2.9.5 Deck Drive: Electric clutch mounted on horizontal engine shaft. "B" Section belt (with self-tensioning idler) from electric clutch to transfer shaft mounted on deck.

Blades are driven by one "B" Section belt (w/self-tensioning idler) from transfer shaft on deck to blade spindles.

2.9.6 Deck: Full floating deck is attached to out-front support frame.

Six anti-scalp rollers provide maximum turf protection.

Dual 7/8" diameter deck support shafts add to the stability of the deck.

Deck design allows for bagging, mulching or side discharge.

2.9.7 Cutting Height Adjustment: an extra-long cushioned lever is used to adjust the cutting height from 1 1/2" (3.8 cm) to 5" (10.2 cm.) in 1/2" (1.3 cm.) increments.

The cutting height adjustment handle has a transport position and all adjustments can be made while the operator remains seated.

2.9.8 Mulching Kit: Optional.

2.10 Dimensions

2.10.1 Overall Width:

	w/52" Deck	w/60" Deck
Without deck -	49.8 in. (126.5 cm)	53.8 in. (136.7 cm)
deflector up:	53.0 in. (134.6 cm)	60.9 in. (154.6 cm)
deflector down:	62.7 in. (159.3 cm)	70.5 in. (179.1 cm)

2.10.2 Overall Length: 78.5 in. (199.4 cm)

2.10.3 Overall Height: 44 in. (111.8 cm.)

2.10.4 Tread Width: (center to center of tires, widthwise)

	w/52" Deck	w/60" Deck
Drive wheels -	39.7 in. (100.1 cm)	43.7 in. (111.0 cm)
Casters -	37.0 in. (93.9 cm)	39.0 in. (99.1 cm)

2.10.5 Wheel Base: (center of caster tire to center of drive tire)
50.3 in. (127.8 cm)

2.10.6 Curb Weight:

w/52" Deck	w/60" deck
976 lbs. (443.6 kg)	1000 lbs. (454.5 kg)

3. ASSEMBLY INSTRUCTIONS

3.1 UNCRATE MOWER

3.2 INSTALL DRIVE WHEELS.

3.2.1 Mount drive wheels with the valve stem to the outside of the unit. Secure using four (4) 1/2-20 x 7/8" UNF bolts (installed in hub) for each wheel. Torque to 95 ft-lbs (128 N·M).

3.3 CHECK TIRE PRESSURE.

3.3.1 Check tire pressure in caster and drive tires. Proper inflation pressure for all four (4) tires is 13 psi (90 kPa). Adjust if necessary.

3.4 INSTALL SEAT RETAINING ROD.

3.4.1 Tilt seat up. Remove 5/16" nylock nut from bolt attaching seat retaining rod to seat frame. Remove retaining rod from seat and insert the "L" shaped end of the rod into the hole directly above the left-side hydraulic pump mounting hardware (the "L" must be positioned to the right). Position the seat retaining rod to the outside of the mounting tab on the seat frame and secure with 5/16" x 1" bolt and nut. Tighten until snug, then loosen just enough so the rod pivots freely.

3.5 INSTALL MOTION CONTROL LEVERS.

3.5.1 Loosen and remove the two (2) 3/8" x 1" bolts and spring disc washers which attach the motion control levers to the control arm shafts for shipping and the two (2) 3/8" x 1" bolts and spring disc washers which are screwed into the control arm shafts.

a) Install the left motion control lever onto the control arm shaft (See Fig 1)on the left side of the console. Place the lever (with the mounting plate towards the rear) on the outside of the control arm shaft and secure with the bolts and washers. Position the lever so the bolts are in the center of the slots on the lever mounting plate and tighten until snug.

Repeat on opposite side of unit.

If the levers do not align with each other, when in the neutral position, (See Fig 2) loosen the hardware and make the appropriate adjustment by sliding/tilting the lever(s) forward or backward unt properly aligned and tighten hardware.

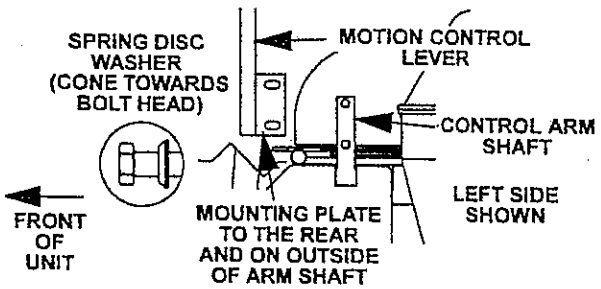

FIG. 1
CONTROL ARM SHAFT

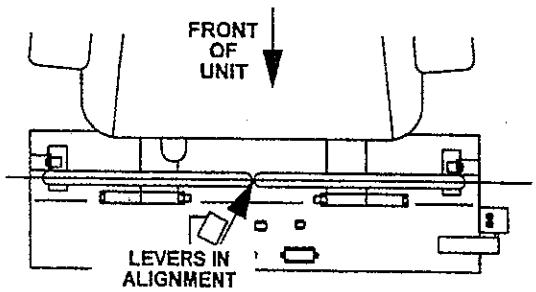

FIG. 2
LEVER ALIGNMENT

b) If the ends of the levers hit against each other, while in the drive position (levers rotated in as far as possible), make adjustments by moving the levers outwards to the neutral lock position and carefully bend them outward. Move them back to the drive position and check for clearance, repeat if necessary.

3.6 POSITION DISCHARGE CHUTE.

3.6.1 Loosen two (2) 5/16" nylock nuts attaching discharge chute. Lower the discharge chute into position. Retighten nylock nuts until chute is snug but can pivot freely.

3.7 SERVICE ENGINE.

If engine is shipped without oil, fill to the appropriate level with SAE 10W-30 or 10W-40, AP1 service class SF or SG for operating in temperatures above 0° F (-18° C). See Engine Operator's Manual.

3.8 SERVICE BATTERY. Machine is shipped with battery dry.

3.8.1 Remove battery from machine. Tilt seat up to gain access to the battery. ***Disconnect*** battery cables - ***negative(black) cable first***. Remove battery hold-down and lift battery out.

3.8.2 Place battery on a level surface and remove vent caps.

3.8.3 Fill cells with battery grade sulfuric acid (1.625 specific gravity) to halfway between top of separators and bottom of vent well.

⚠ DANGER

- **Flames or sparks could cause the battery to explode. Always shield eyes and face from battery.**

3.8.4 Check acid temperature and state of charge:

a) Acid temperature must be at least 80° F (26.7° C). (Put thermometer in center cell).

b) State of charge must be good.

1) Check with electrical battery tester according to instructions on the tester,

OR

2) Use a battery hydrometer - specific gravity must be at least 1.250.

3.8.5 If acid temperature is not 80° F (26.7° C) or state of charge is not good, charge at 15 amps(20 amp maximum). Slow charging is permissible. ***ACID TEMPERATURE MUST NEVER EXCEED 125° F (51.7° C) WHILE CHARGING.***

3.8.6 After charging, add battery acid up to the bottom of vent wells and install vent caps. Prior to installation, check battery with a hi-rate load tester following the printed instructions on the tester ***State of Charge*** and ***Condition*** must be indicated as ***"GOOD"*** or ***"OK"***.

3.8.7 Install battery in machine and secure battery hold-down. ***DO NOT*** **over-tighten.**

⚠ CAUTION

- **Be sure ignition switch is "OFF" and key is removed from ignition. Sparks could cause an explosion or moving parts could accidentally engage causing personal injury.**

Connect battery cables - ***positive (red) cable first***, then the negative (black) cable. Slip insulator boots over terminals.

4. OPERATION INSTRUCTIONS

4.1 CONTROLS

4.1.1 Familiarize yourself with all controls before operating the mower.

4.1.2 <u>Motion Control Levers</u>: Located on each side of the console. The left lever controls the flow of hydraulic oil from the

(4.1.2 cont.)

left hydrostatic pump to the left drive wheel motor. The right lever controls the flow of hydraulic oil from the right hydrostatic pump to the right drive wheel motor.

IMPORTANT: To begin movement (forward or backward) the operator must be in the seat, the brake lever must be disengaged (pushed down) before the motion control levers can be moved in or the engine will kill.

When levers are centered in the T-slot the drive system is in the neutral position. With levers moved out in the T-slot the drive system is in the ***neutral lock*** position (See Fig 3).

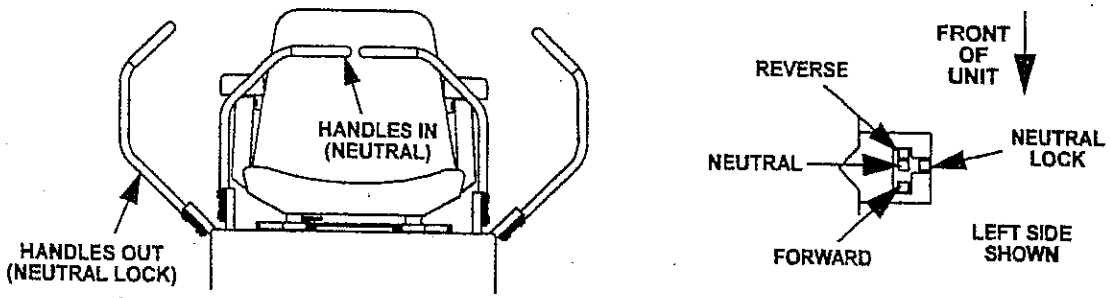

FIG. 3
MOTION CONTROL POSITIONS

By moving both levers an ***equal*** amount forward or back from the neutral position the machine can be caused to move forward or backward in a straight line.

Movement of the ***left lever forward*** will cause the ***left drive wheel*** to rotate in a forward direction. Movement of the ***right lever forward*** will cause the ***right drive wheel*** to rotate in a forward direction. To ***stop*** forward travel, pull the levers back to the neutral position.

To ***turn left*** while moving forward, move the ***left lever*** back toward neutral to slow the left drive wheel.

To ***turn right*** while moving forward, move the ***right lever*** back toward neutral.

To make a ***zero turn*** to the ***left***, pull the left lever back beyond neutral while holding the right lever slightly ahead of neutral.

To make a ***zero turn*** to the ***right***, pull the right lever back beyond the neutral position while holding the left lever slightly ahead of the neutral position.

Pulling the ***levers back*** from the neutral position will cause the respective drive wheels to rotate in a ***reverse*** direction (spring tension can be felt when moving into reverse from neutral).

To turn to the left while backing, move the left lever forward toward neutral. To turn to the right while backing, move the right lever forward toward neutral.

⚠ CAUTION

- **Use caution when making turns. Slow the machine down before making sharp turns. Unit can spin very rapidly by positioning one lever too much ahead of the other.**

4.1.3 Blade Engagement Switch: Located just left of center on the console (left side of ignition switch). Switch lever must be ***pulled out*** and ***moved forward*** to the "ON" position to engage blades. Switch lever is moved back to the "OFF" position to stop the blades.

4.1.4 Choke Control: Located at lower center of console (below ignition switch). Choke is used to aid in starting a cold engine. The choke control is ***pulled out*** to be in the "ON" position and ***pushed in*** to be in the "OFF" position. ***DO NOT*** run a warm engine with choke in the "ON" position.

4.1.5 Throttle Control: Located on console just right of center (right side of ignition switch). Throttle is used to control engine speed. Moving throttle lever ***forward*** will increase engine speed and moving throttle lever ***to the rear*** will decrease engine speed.

4.1.6 Brake Lever: Located on left side of unit, just to the front of the console. The brake lever engages a parking brake on the drive wheels.

Pull the lever up and ***rearward*** to ***engage*** the brake.

Push the lever ***forward*** and ***down*** to ***disengage*** the brake.

When parking on a steep slope, the wheels must be chocked or blocked in addition to the brake being engaged. The unit must be tied down and brake engaged when transporting.

4.1.7 Ignition Switch: Located on the upper center of console. The ignition switch is used to start and stop the engine. The switch has three positions "OFF", "ON" and "START". Insert key into switch and rotate clockwise to the "ON" position.

Rotate clockwise to the next position to engage the starter (key must be held against spring pressure in this position).

Operator must be in seat with brake engaged, motion control levers out (neutral lock position) and blade engagement switch "OFF" to start engine.

4.1.8 Hour Meter: Located left of center below the blade engagement switch. The hour meter records the number of hours the engine has run. If the ignition switch is left on without the engine running, the hour meter will not run.

4.1.9 Fuel Shut-Off Valve: Located directly below center of console. The fuel shut-off valve is used to shut off the fuel when the machine will not be used for a few days, during transport to and from the jobsite, and when parked inside a building. The valve has three positions, each position made in 1/4 turn increments.

(4.1.9 cont.)

Valve handle down is the "OFF" position.
Rotate valve handle 1/4 turn right (from "Off" position) for fuel flow from the right tank.
Rotate valve handle 1/4 turn left (from "Off" position) for fuel flow from the left tank.

4.1.10 Drive Wheel Release Valves: Located on the top left front corner of hydrostatic pumps. Drive wheel release valves are used to release the hydrostatic drive system to allow the machine to be pushed without the engine running. Tilt seat up to gain access to pumps.

With a 5/8 wrench, turn both valves one turn counter-clockwise to release drive system.

Turn clockwise to reset system. ***DO NOT overtighten.***

DO NOT tow machine.

4.2 PRE-START

4.2.1 Fill fuel tanks. For best results use only clean, fresh regular grade ***unleaded*** gasoline with an octane rating of 87 or higher. Regular grade leaded gasoline may also be used; however, combustion chamber and cylinder head will require more frequent service. See Engine Owner's Manual.

DO NOT add oil to gasoline.

DO NOT overfill fuel tank. Leave room for fuel to expand.

4.2.2 Make sure you understand the controls, their locations, their functions, and their safety requirements.

4.2.3 Refer to Maintenance Section (Page 18) and perform all the necessary inspection and maintenance steps.

4.3 MOWING

4.3.1 Open fuel shut-off valve (left or right tank).

4.3.2 Starting Engine: ***Operator must be in seat*** with the ***brake engaged***, the ***blade engagement switch disengaged, and the motion control levers out (neutral lock position).***

On a ***cold*** engine, place the ***throttle midway*** between the "SLOW" and "FAST" positions and pull ***choke*** to the "ON" position. Turn ignition switch to the "start" position. Release the switch as soon as the engine starts.

After starting a cold engine, gradually return choke to the "OFF" position as the engine warms up.

On a ***warm*** engine, place the ***throttle midway*** between the "SLOW" and "FAST" positions and place the ***choke*** in the "OFF" position.

IMPORTANT: ***DO NOT*** crank the engine continuously for more than ten (10) seconds at a time. If the engine does not start, allow a 60 second cool-down period between starting attempts. Failure to follow these guide lines can burn out the starter motor.

4.3.3 Engaging Electric Blade Clutch: The electric blade clutch toggle switch engages the cutting blades. Be sure that *all* persons are ***clear*** of mower deck and discharge area ***before engaging*** cutting blades.

IMPORTANT: Operator must be in seat before the blades can be engaged.

Set throttle to "midway" position. Pull outward on the toggle switch lever and flip toggle switch lever forward to the "ON" position. Accelerate to full throttle to begin mowing.

4.3.4 Stopping Electric Blade Clutch: Flip the electric blade clutch toggle switch to the rear. This moves the toggle switch to the "OFF" position stopping the cutting blades.

4.3.5 Stopping Engine: Bring unit to a ***full stop***. ***Disengage*** the cutting blades, ***move motion control levers out*** to the ***neutral lock*** position and ***set parking brake***.

Move throttle to the "SLOW" position.

Rotate ignition switch to "OFF" position. Remove the key to prevent children or other unauthorized persons from starting engine.

Close fuel shut-off valve when machine will not be used for a few days, when transporting, and when the unit is parked inside a building.

4.4 TRANSPORTING

Use a heavy duty trailer to transport the machine.
Lock brake and block wheels.
Securely fasten the machine to the trailer with straps, chains, cable, or ropes. Be sure that the trailer has all necessary lighting and marking as required by law.
Secure safety chain.

5. MAINTENANCE & ADJUSTMENTS

5.1 PERIODIC MAINTENANCE

5.1.1 Check engine oil level:

Service Interval: Daily

a) Make sure engine is stopped and on a level surface.

b) Check with engine cold.

c) Clean area around dipstick. Remove dipstick and wipe oil off. Reinsert the dipstick and push it all the way down into the tube. Remove the dipstick and read the oil level.

d) If the oil level is low, wipe off the area around the oil fill cap, remove cap and fill to the "F" mark on

the dipstick. Use oil as specified in Specifications Section (Page 9) and in Engine Owner's Manual. *DO NOT* overfill.

IMPORTANT: ***DO NOT*** **operate the engine with the oil level below the "L" mark on the dipstick, or over the "F" mark.**

5.1.2 Clean engine air cooling system:

Service Interval: Daily or more often in dry conditions

⚠ CAUTION

- **Excessive debris around engine cooling air intake and inside of pump drive belt compartment can create a fire hazard. Excessive debris, damaged or missing rubber baffles can cause engine and hydraulic system to overheat.**

IMPORTANT: BEFORE STARTING ENGINE CLEAN GRASS FROM PUMP DRIVE BELT COMPARTMENT. CHECK MORE OFTEN IN DRY CONDITIONS

Decal located:

- Console behind ignition switch
- Rubber heat shield flap behind seat

Part No. 633462

a) Stop engine and remove key.

b) Clean all debris from rotating engine air intake screen and from around engine shrouding.

c) Clean all debris from inside of pump drive belt compartment.

d) Inspect rubber engine baffles for proper fit. Replace if necessary.

5.1.3 Clean grass build-up under deck.

Service Interval: Daily

a) Stop engine and remove key.

b) Raise deck to the transport (5" cutting height) position. Lift the front of unit and support unit using jack stands or equivalent support.

⚠ CAUTION

- **When it is necessary to raise the deck or mower for service or maintenance,** ***DO NOT*** **rely solely on mechanical or hydraulic jacks for support. Use adequate jack stands or equivalent support.**

c) Clean out any grass build-up from underside of deck and in deck discharge chute.

5.1.4 Check mower blades.

Service Interval: Daily

a) Stop engine and remove key.

b) Lift deck and secure in raised position as stated in Section 5.1.3 page 19.

c) Inspect blades and sharpen or replace as required.

d) Torque blade bolts to 40 ft.lbs. Be sure the spring disk washer cone is installed toward the bolt head (See Figure 4).

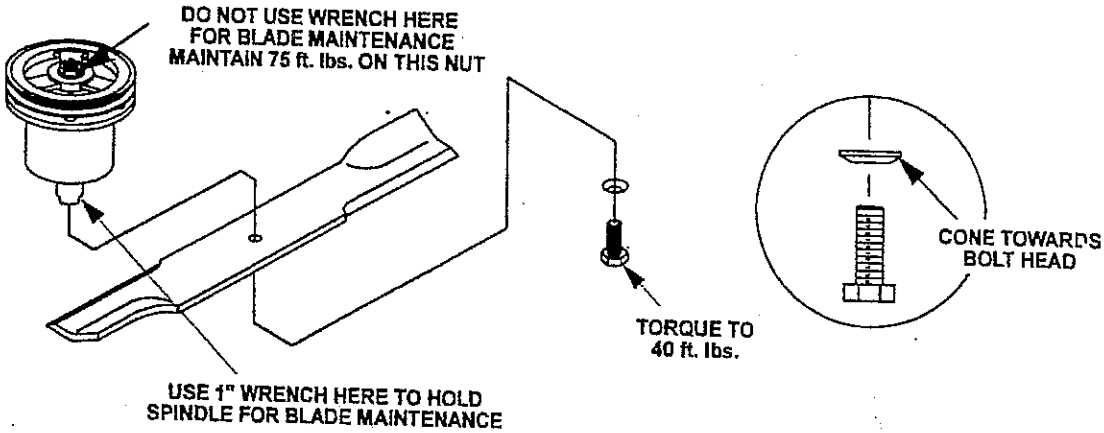

FIG. 4
BLADE BOLT INSTALLATION

5.1.5 Check safety interlock system.

Service Interval: Daily

a) Check starting circuit. Starter ***should*** crank with ***operator in seat***, parking brake ***engaged***, cutting blades ***disengaged*** and motion control levers moved out in the ***neutral lock*** position.

Try to start with ***operator out of seat***, parking brake ***engaged***, blades ***disengaged*** and motion control levers in ***neutral lock*** position - starter ***must not crank***.

Try to start with ***operator in seat***, parking brake ***disengaged***, blades ***disengaged*** and motion control levers in the ***neutral lock*** position - starter ***must not crank***.

Try to start with ***operator in seat***, parking brake ***engaged***, blades ***engaged*** and motion control levers in the ***neutral lock*** position - starter ***must not crank***.

Try to start with ***operator in seat***, parking brake ***engaged***, blades ***disengaged, and the left motion control lever in***, starter ***must not crank***, repeat again with the ***right lever in***, then with ***both levers in*** - starter ***must not crank***.

(5.1.5 Cont.)

b) Check kill circuits. Run engine at one-third throttle, ***disengage*** parking brake and ***raise off*** of seat (but do not get off of machine) engine ***must stop*** after approx. 1/2 second has elapsed (seat has time delay kill switch to prevent cut-outs on rough terrain).

Run engine at one-third throttle, ***engage cutting blades*** and ***raise off*** of seat (but do not get off of machine) engine ***must stop*** after 1/2 second has elapsed.

Run engine at one-third throttle, with brake disengaged, move levers in and raise off seat(but do not get off of machine) engine ***must stop*** after 1/2 second has elapsed.

Again, run engine at one-third throttle, brake ***engaged,*** and move ***left motion control lever in*** - engine ***must stop***. Repeat again moving the ***right lever in***, then moving ***both levers in*** - engine ***must stop*** whether operator is ***on seat or not***.

NOTE: If machine *does not* pass any of these tests, do not operate. Contact your authorized EXMARK SERVICE DEALER.

⚠ CAUTION

- **It is essential that operator safety mechanisms be connected and in proper operating condition prior to use for mowing.**

5.1.6 Check for loose hardware.

Service Interval: Daily

a) Stop engine and remove key.

b) Visually inspect machine for any loose hardware or any other possible problem. Tighten hardware or correct the problem before operating.

5.1.7 Service air cleaner.

Service Interval: 25 hrs.
more often under severe conditions.

a) Stop engine and remove key.

c) Loosen wing nut and remove air cleaner compartment cover.

d) Remove foam pre-cleaner element and wash in warm water with detergent. Rinse until all traces of detergent are eliminated and squeeze out excess water ***(DO NOT wring)***. Air dry.

e) Check paper element. ***Gently*** tap the flat side of the paper element to dislodge any dirt. ***DO NOT*** wash. Replace if dirty, bent or damaged.

f) Reinstall foam pre-cleaner to paper element, then reinstall paper element and cover.

5.1.8 Change engine oil:

Service Interval: 100 hrs.

NOTE: Change oil and filter after first five(5) hrs. of operation

a) Stop engine and remove key.

b) Drain oil while engine is warm from operation.

c) Remove the oil drain plug from the right under-side of the engine. Allow oil to drain then replace drain plug.

d) Replace the oil filter ***every other*** oil change. Clean around oil filter and unscrew filter to remove. Before reinstalling new filter, apply a thin coating of oil on the surface of the rubber seal. Turn filter clockwise until rubber seal contacts the filter adapter then tighten filter an additional 2/3 to 3/4 turn.

e) Clean around oil fill cap and remove cap. Fill to specified capacity and replace cap. Use oil as stated in the Specifications Section (Page 9).

DO NOT overfill.

f) Start the engine and check for leaks.

5.1.9 Check hydraulic oil level:

Service Interval: 25 hr.

a) Stop engine.

b) Tilt seat up.

c) Clean area around hydraulic reservoir cap and remove cap. Oil level should be to the top of the baffle inside the tank. If not, add oil.

Use only Mobil 1 15W-50 synthetic motor oil.

CAUTION

- **Safely relieve all pressure in the hydraulic system before disconnecting lines or before performing any work on the hydraulic system.**

CAUTION

- **Make sure all the hydraulic fluid connections are tight and all the hydraulic hoses and lines are in good condition before applying pressure to the system.**

CAUTION

- **Keep body and hands away from pin holes or nozzles that eject hydraulic fluid under high pressure. Use paper or cardboard, *NOT HANDS* to search for leaks.**

⚠ CAUTION

- Hydraulic fluid escaping under pressure may have sufficient force to penetrate skin and cause serious injury. If foreign fluid is injected into the skin, it must be surgically removed within a few hours by a doctor familiar with this type of injury or gangrene may result.

5.1.10 Check tire pressures:

Service Interval: 25 hrs.

a) Stop engine and remove key.

b) Inflate tires to pressures specified in Specifications Section 2.8 (Page 11).

5.1.11 Check battery electrolyte level:

Service Interval: 25 hrs.

a) Stop engine and remove key.

b) Tilt seat up.

c) Remove vent caps from battery. Fill with drinking water to bottom of vent wells and replace vent caps.

d) See Assembly Section 3.8 (Page 14) for servicing a new battery.

⚠ WARNING 513747

BATTERY CONTAINS SULFURIC ACID, AVOID CONTACT AND ALWAYS SHIELD EYES, FACE, SKIN AND CLOTHING FROM BATTERY. CIGARETTES, FLAMES OR SPARKS COULD CAUSE BATTERY TO EXPLODE. DO NOT CHARGE OR USE BOOSTER CABLES OR ADJUST POST CONNECTIONS WITHOUT PROPER TRAINING. IN EVENT OF AN ACCIDENT FLUSH WITH WATER AND CALL A PHYSICIAN IMMEDIATELY. KEEP OUT OF REACH OF CHILDREN.

PART NO. 513747 LOCATION: Top Center of Console Under Front of Seat

5.1.12 Check condition of belts:

Service Interval: 25 hrs.

a) Stop engine and remove key.

b) Tilt seat up. Lift the rubber flap on front side of the engine to check pump drive belts.

c) Remove left and right belt shields on deck and lift up floor pan to inspect deck drive belt.

d) Check under machine to inspect the mule drive belt.

e) See Sections 5.2.2, 5.2.3, and 5.2.4 (Page 28-29) for belt adjustment.

5.1.13 Lubricate grease fittings:

Service Interval: Refer to chart.

a) Stop engine and remove key.

b) Lubricate fittings with one to two pumps of SAE No. 2 multi-purpose gun grease (see recommended lubricants following the lubrication chart).

Refer to the following chart for fitting locations and lubrication schedule.

LUBRICATION CHART

FITTING LOCATIONS	NO. of PLACES	SERVICE INTERVAL*
1. Front Casters	2	25 hours
2. Front Caster Pivots	2	25 hours
3. Deck Height Adjustment Shaft Brngs.	5	25 hours
4. Cutter Housing Spindles	3	†25 hours
5. Deck Drive Belt Idler	1	25 hours
6. Brake Brackets	2	25 hours
7. Mule Drive Belt Idler	1	25 hours
8. Pump Drive Belt Idler	1	25 hours
9. Deck Rear Struts	2	25 hours

* More often if operating under severe conditions.

† Under severe cutting conditions, two pumps of grease each day may be more beneficial.

Recommended SAE No. 2 Greases:

U.S. Lithium MP White Grease 2125

Pennzoil #705; Pennzoil #707L; Pennzoil #TTM 302

Mobil Grease CM-P; Mobil Grease CM-S; Mobilith SHC220; Mobil Grease Special; Mobilith SHC460
(Available at Mobil Stations)

Ronex MP - (Available at Exxon Stations)

Shell Alvania #2 - (Available at Shell Stations)

Super Lube M EP #2 or Super Stay M #2
(Available at Conoco Stations)

5.1.14 Lubricate throttle and choke cables:

Service Interval: 25 hrs.

a) Stop engine and remove key.

b) Lubricate throttle and choke cable ends with a spray type lubricant or light oil.

5.1.15 Lubricate seat switch actuator:

Service Interval: 25 hrs.

a) Stop engine and remove key.

b) Tilt seat up.

c) Apply grease to top portion of seat switch actuator rod by working grease in between spring. Apply grease to bottom end of switch actuator rod by depressing rod and smearing bottom end of rod with grease.

5.1.16 Lubricate brake handle pivot:

Service Interval: 25 hrs.

a) Stop engine and remove key.

b) Lubricate bronze bushings on brake handle pivot with a spray type lubricant or light oil.

5.1.17 Lubricate brake rod bushings:

Service Interval: 25 hrs.

a) Stop engine and remove key.

b) Tilt seat up.

c) Lubricate bronze bushings on each end of brake rod shaft with a spray type lubricant or a light oil (bushings are located to the inside of the flange bearings).

5.1.18 Lubricate motion control bronze bushings:

Service Interval: 25 hrs.

a) Stop engine and remove key.

b) Tilt seat up.

c) Lubricate bronze bushings on flange bearings securing the motion control arm shafts with a light oil or a spray type lubricant.

5.1.19 Remove engine shrouds and clean cooling fins:

Service Interval: 50 hrs.

a) Stop engine and remove key.

b) Remove cooling shrouds from engine and clean cooling fins. Also clean dust, dirt and oil from external surfaces of engine which can cause improper cooling.

c) Make sure cooling shrouds are reinstalled. Operating the engine without cooling shrouds will cause engine damage due to overheating.

5.1.20 Check spark plugs:

Service Interval: 100 hrs.

a) Remove spark plugs, check condition and reset gaps, or replace with new plugs. See Engine Owners Manual.

5.1.21 Change fuel filter:

Service Interval: As Required

a) A fuel filter is installed between the fuel tanks and the engine. Replace when necessary w/**Kohler** P/N 2405002.

5.1.22 Change hydraulic system filter:

Service Interval: After First 150 hrs. Then each 500 hrs. or yearly thereafter

a) Stop engine and remove key.

b) Raise seat.

c) Carefully clean area around filter. It is ***important*** that ***no dirt*** or ***contamination*** enter hydraulic system.

d) Unscrew filter to remove and allow oil to drain from reservoir. Before reinstalling new filter, fill it with Mobil 1 15W-50 and apply a thin coat of oil on the surface of the rubber seal. Turn filter clockwise until rubber seal contacts the filter adapter then tighten the filter an additional 2/3 to 3/4 turn.
Use only Exmark ***Part No. 513211***, filter element

e) Fill reservoir as stated in Section 5.1.9, Page 22.

f) Raise the rear of machine up and support with jack stands (or equivalent support) just high enough to allow drive wheels to turn freely.

g) Start engine and move throttle control ahead to full throttle position. Move the speed control levers to the full speed and run for several minutes. Shut down machine and recheck oil level.

Do not change hydraulic system oil (except for what can be drained when changing filter), unless it is felt the oil has been contaminated or been extremely hot.
Changing oil unnecessarily could ***damage*** hydraulic system by introducing contaminates into the system.

5.2 ADJUSTMENTS

⚠ CAUTION

- **Disengage blade clutch, shut off engine and remove key before servicing, cleaning or making adjustments.**

5.2.1 Cutting Height Adjustment.

a) Stop machine and move drive levers out to neutral lock position.

b) Disengage blades.

c) Raise the deck lever to the transport position (also the 5" cutting height position). See Fig 5, Page 27.
NOTE: When changing cutting height positions, always come to a complete stop and disengage the mower blades.

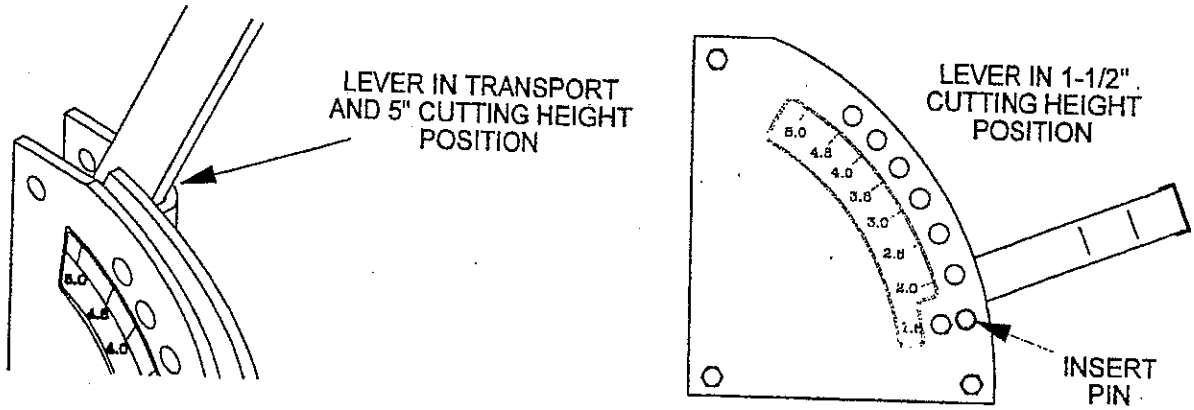

FIG. 5
CUTTING HEIGHT POSITION

d) Insert height adjustment pin into hole corresponding to desired cutting height and install hairpin cotter. See decal on right side of deck lift plate.

e) Move lever out of transport (or 5" cutting height) position and down onto height adjustment pin to mow at selected height.

f) To transport, move lever back up to transport (or 5" cutting height) position.

g) Adjust anti-scalp rollers for maximum deck flotation. Place rollers in one of the positions shown in Fig. 6. Rollers should maintain 1/4 in. (6.4mm) clearance to ground. *Do Not* adjust rollers to support the deck. Be sure *bolt is tightened properly* or loss of anti-scalp roller may result.

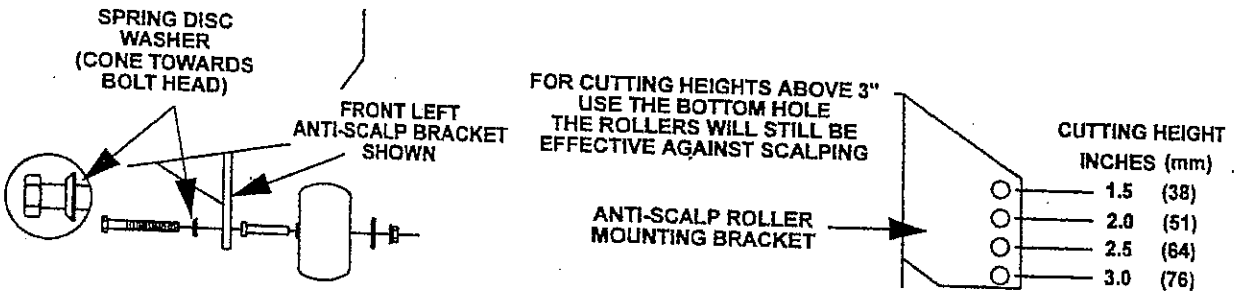

FIG. 6
ANTI-SCALP ROLLER ADJUSTMENT

5.2.2 DECK LEVELING

a) Position mower on a flat surface.

b) Stop engine and remove key.

c) Check tire pressure of all four (4) tires. If needed, adjust to 13 psi (90 kPa).

d) Set anti-scalp rollers to top holes (1 1/2" cutting height position) or remove them completely for this adjustment. Set deck height adjustment lever to the 1 1/2" cutting height position. See section 5.2.1.

(5.2.2 Cont.)

e) Take all force off of the two large deck lift springs by loosening the nut at the front of each spring. See Fig. 7.

f) Place a 3/4" thick block of wood under each of the two (2) rear anti-scalp roller brackets and place one under ***one of the front center*** anti-scalp roller brackets. Adjust the two (2) rear upper chain attachment bolts in the slots so the rear of the deck is supported by the chains and the rear wood blocks will just slide out (front of deck is supported by wood block under one of the front caster roller brackets). Tighten hardware.

g) Remove the front wood block and adjust the front upper chain bolts in the slots so that all four chains have equal tension. Make sure all chain attachment bolts are tight and adjust the height of the front deck by adjusting the front swivels on the spring rods.

h) To adjust front swivels, determine which direction the chain attachment arm needs to travel in order to get desired deck height. Loosen the nut on the front of the swivel on each side of the unit and adjust by turning the nuts on the rear side of the swivels ***(adjustment must be equal on both sides)*** until desired distance is obtained (See Fig 7). Adjust to where the front wood block just slides under one of the front caster roller brackets.

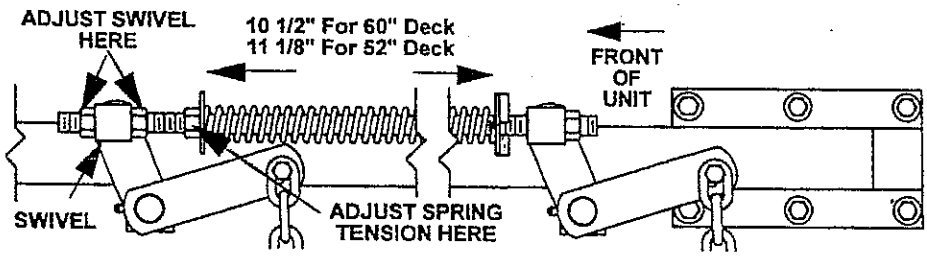

FIG. 7
SWIVEL ADJUSTMENT
SPRING COMPRESSION ADJUSTMENT

i) Raise deck lift lever to the 5" cutting height position (also transport position, See Fig 5, Page 27). Adjust spring compression until proper distance is obtained between the two large washers (See Fig 7). Adjustment is made by turning the nut at the front of each spring (clockwise will shorten the spring, counter-clockwise will lengthen the spring Lower deck lift lever back to the 1 1/2" cutting height position and recheck the clearance under the anti-scalp roller brackets with the 3/4" wood blocks.
NOTE: When above adjustments have been made, the front of the deck will be slightly lower than the rear of the deck.

5.2.3 <u>Pump Drive Belt Tension</u>.

Self-tensioning - No adjustment necessary.

5.2.4 Mule Drive Belt Tension Adjustment.

Self-tensioning idler, adjust as follows:

a) Stop engine and remove key.

b) Check to make sure the bolt in the center of the spring loaded pulley, on left side engine deck support, is positioned in between the two alignment holes in the left support plate (See Fig 8).

c) If adjustment is necessary, loosen the idler pulley on the right-hand side so it can move up and down in the slot.

Place a wrench on the 3/8" nut in the center of the spring loaded pulley and apply upward pressure to relieve tension on the spring (a 1/2" drive breaker bar and 9/16 socket work best).

Reposition the adjusting pulley either up or down in the slot and tighten until snug. Recheck the position of the center bolt on the spring loaded pulley. Readjust if necessary and tighten hardware.

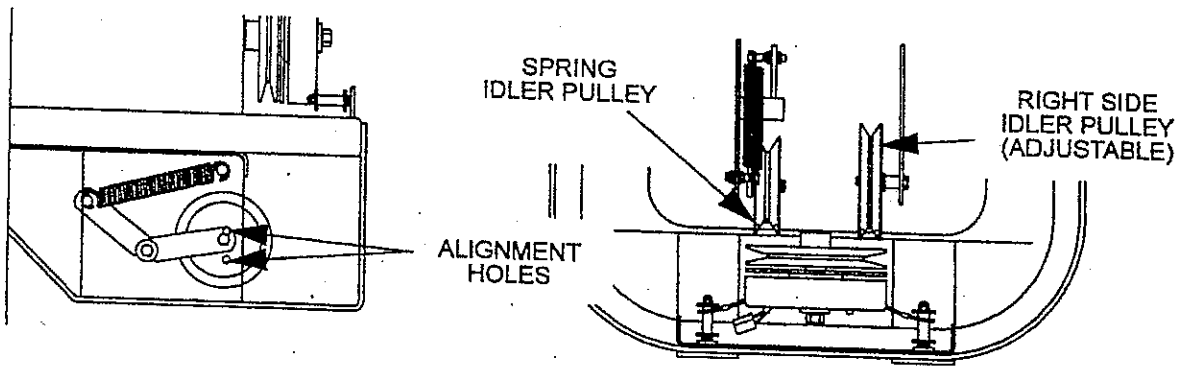

FIG. 8
MULE DRIVE BELT ADJUSTMENT

5.2.5 Deck Belt Tension.

a) The deck belt is tensioned by a self-tensioning idler, ***no adjustment is necessary***.

5.2.6 Adjust Seat Switch.

a) Adjust the seat actuator rod length to where the machine will shut off when the operator raises off the seat (with ***brake disengaged or blade switch engaged***) but will continue to run with operator in seat (a slight shift in weight should not shut machine off). Normal adjustment is when length of spring is 2.09" (with seat up).

NOTE: To prevent rough ground cut-outs the unit is equipped with a time delayed seat switch. When the operator raises off the seat with either the brake disengaged or the cutting blades engaged, the engine should stop after 1/2 second has elapsed.

b) To adjust seat switch, loosen locknut on bottom of the actuator rod (5/16 x 7" bolt) and adjust the nuts to move the actuator plate up or down on the rod.

5.2.7 Belt Guide Adjustment.

a) Stop engine and remove key.

b) Remove the belt shield on the right side of mower deck.

c) Note belt guide bolted to deck near the shield support stud and right-hand pulley. Guide should be 1/8" away from the belt, with bolt-end of guide at end of slot (See Fig 9).

d) If adjustment is necessary, loosen the bolt securing belt guide and make proper adjustment. Tighten hardware.

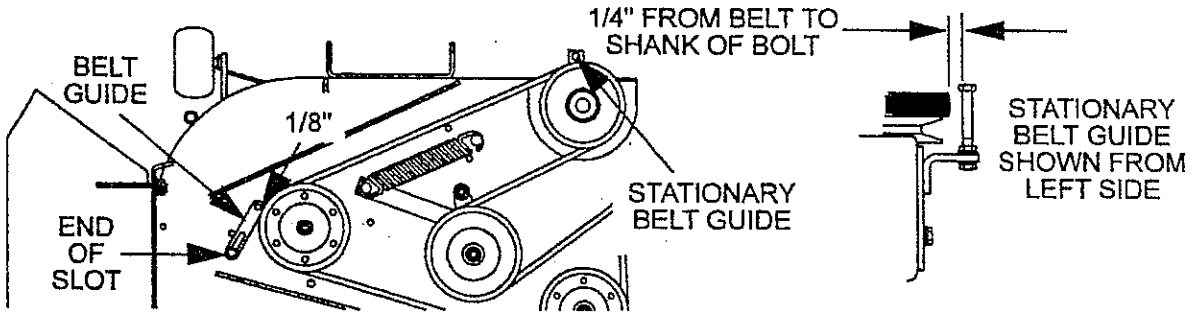

FIG. 9
BELT GUIDE POSITIONING

e) There is also a stationary belt guide at the rear center of the deck. Adjust to where shank of bolt is 1/4" away from belt. Note: Bolt head is above belt.

5.2.8 Brake Link Adjustment.

Check to make sure brake is adjusted properly.

a) Disengage brake lever (lever down).

b) Measure the length of the spring. Measurement should be 2.9" between washers (see Fig 10).

c) If adjustment is necessary, tighten the nut directly below the yoke and loosen the bottom nut (bottom one of the two tightened together) below the spring. Turn the nut directly below the washer (top nut of the two tightened together) until the correct measurement is obtained. Tighten the two nuts together and repeat on opposite side of unit.

Turn clockwise to shorten spring length and turn counter-clockwise to lengthen the spring.

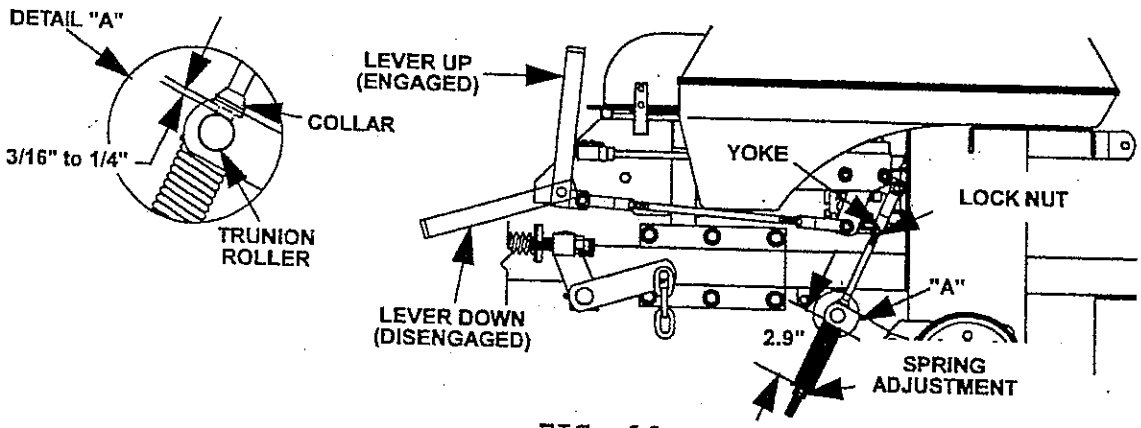

FIG. 10
BRAKE ADJUSTMENT

(5.2.8 Cont.)

d) Engage brake lever (lever up).

e) Measure the distance between the trunion roller and the collar (welded to rod). Measurement should be 3/16" to 1/4" (See Fig 10).

f) If adjustment is necessary, loosen the nut directly below the yoke. Turn the bottom nut(below washer) until the correct measurement is obtained (See Fig 10) turn nut clockwise to lengthen the gap (screws rod into yoke) and turn counter-clockwise to shorten the gap (screws rod out of yoke). Tighten nut against yoke and check opposite side of unit, repeat if necessary.

5.2.9 Adjust Throttle Lever Tension.

a) Stop engine and remove key.

b) Tension in throttle lever can be adjusted by adjusting the tightness of the lever pivot bolt, which is located under the console.

5.2.10 Electric Clutch Adjustment:

No adjustment necessary.

5.2.11 Reverse Indicator Adjustment:

a) Stop engine and remove ignition key.

b) Tilt seat forward.

c) Begin with either the left or right motion control lever. Move lever to the neutral position and pull lever back until the clevis pin (on arm below pivot shaft) contacts the end of the slot (just beginning to put pressure on spring), See Fig 11.

d) Check where lever is relative to notch in console (should be centered allowing lever to pivot outward to the neutral lock position).

e) If adjustment is needed, loosen the nut against the yoke and while applying slight rearward pressure on the motion control lever, turn the head of the adjustment bolt in the

(5.2.11 Cont.)

appropriate direction until lever is centered (keeping rearward pressure on the lever will keep the pin at the end of the slot and allow the adjustment bolt to move the lever to the appropriate position). Tighten lock nut.

f) Repeat on opposite side of unit.

5.2.12 Motion control linkage adjustment.

a) This adjustment must be made with the drive wheels turning. First raise the frame and block up so that drive wheels can rotate freely.

⚠ CAUTION

- **When it is necessary to raise the deck or mower for service or maintenance, *DO NOT* rely solely on mechanical or hydraulic jacks for support. Use adequate jack stands or equivalent support.**

b) Tilt seat up.

c) Remove the electrical connection from the seat safety switch, located directly to the left of the seat switch assembly beside the hydraulic oil reservoir. ***Temporarily*** install a jumper wire across the terminals in the connector of the wiring harness.

d) Loosen locknuts from the ball joints on the two rods which connect the motion control assemblies to the pump control arms (See Fig 11).

NOTE: The nuts to the front the unit on each rod have left-hand threads.

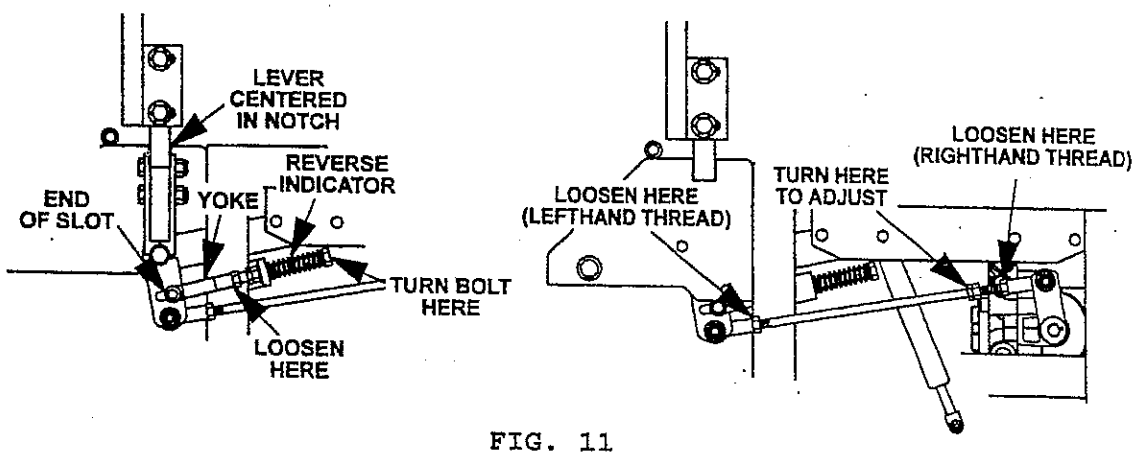

FIG. 11
MOTION CONTROL ADJUSTMENT

e) Start engine. *Brake must be engaged and motion control levers out to start engine. Operator does not have to be in the seat because of the jumper wire being used.* Open to 1/2 throttle and release brake.

(5.2.12 Cont.)

f) The reverse indicator spring must be correct before the following adjustments can be made (See Section 5.2.10, Page 31).

g) Begin on either the left or right side of unit and bring the motion control lever in to the neutral position. Adjust pump control rod length by rotating the double nuts on the rod in the appropriate direction until the wheels stop turning (See Fig 11).
Move the motion control lever to the forward position and bring back to neutral, the wheel must stop turning. Do the same in reverse and make adjustments if needed.
NOTE: The motion control lever needs to be in neutral while making any necessary adjustments.
The left rod assembly controls the left wheel and the right rod assembly controls the right wheel.

h) Open to full throttle and make sure wheels remain stopped. readjust if necessary.

i) Repeat on opposite side of unit. Tighten locknuts against balljoints.

j) Remove jumper wire from wire harness connector and plug connector into seat switch.

⚠ CAUTION

- **Keep clear of wheels and other moving parts when making these adjustments.**

6. TROUBLE SHOOTING

6.1 MOWER CUTS UNEVENLY.

a) Check air pressure in tires; 13 psi/drive, 13 psi/ pneumatic casters. A more uniform cutting height may be obtained with higher tire pressure on rough terrain.

A lower tire pressure provides more flotation. Higher pressures in front castors will cause them to shimmy on hard surfaces.

b) Check deck support chains.

c) Check deck height adjustment (See Adjustments Section 5, Sections 5.2.1, Pages 26-28.

d) Check blades tip to tip for straightness (they should be within 3/16" or one blade width from being in line.)

6.2 ENGINE WILL NOT START.

a) Be sure the throttle control is midway between the "SLOW" and "FAST" positions, and the choke is in the "ON" position for a cold engine or the "OFF" position for a warm engine.

(6.2 Cont.)

b) Make sure there is fuel in the fuel tank and that the fuel valve is open.

c) Operator must be in the seat.
Be sure the seat switch is properly adjusted.
See Section 5.2.5 (Page 29).

d) Make sure the parking brake is set and motion control levers are moved out (neutral lock position).

e) Check that the blades are disengaged.

f) Check that the spark plug wires are properly connected.

g) Check for loose or faulty wiring connections.

h) Check for corrosion at all wiring connections.
Even minor corrosion may cause a faulty connection.
Clean connector terminals thoroughly with electrical contact cleaner, apply dielectric grease and reconnect.

NOTE: When disconnecting electrical connectors *DO NOT* pull on the wires to separate the connectors.

NOTE: After carefully checking the above steps, attempt to start the engine. If it does not start, contact your authorized Exmark service dealer.

⚠ CAUTION

- **It is essential that all operator safety mechanisms be connected and in proper operating condition prior to mower use.**

6.3 MOWER PULLS LEFT OR RIGHT (W/LEVERS FULLY FORWARD).

a) Check air pressure in tires; 13 psi/drive, 13 psi/ pneumatic castors.

b) Check motion control linkage adjustment.

1) Shut off engine and raise the frame blocking it up so the drive wheels can rotate freely.

⚠ CAUTION

- **When it is necessary to raise the deck or mower for service or maintenance, *DO NOT* rely solely on mechanical or hydraulic jacks for support. Use adequate jack stands or equivalent support.**

2) Tilt seat up.

3) Remove the electrical connection from the seat safety switch, located directly to the left of the seat switch assembly beside the hydraulic reservoir.

(6.3 Cont.)

Temporarily install a jumper wire across the terminals in the connector of the wiring harness.

4) Start engine and release brake.

5) Check the drive wheels and see if one of them creeps forward or backward when motion control levers are in neutral. If so, readjust as stated in Section 5.2.11 Page 31.

c) Lower mower to the ground and operate mower with both levers fully forward. If the mower still pulls to one side, it is possible to "cheat" on the pump adjustment linkages.

1) Shut off engine and tilt up seat.

2) On the side which is going faster, loosen the locknuts on the pump control linkage. Shorten linkage by a small amount (try 1/2 a turn) and tighten locknuts.

3) Start engine and disengage the brake. Make sure mower dose not creep with the levers in neutral.

4) Operate mower with both levers fully forward. If the mower still pulls to one side, repeat Steps 1 thru 3.

When a problem occurs, do not overlook the simple causes. For example, starting problems could be caused by an empty fuel tank.

The following table lists some of the common causes of trouble.

Do not attempt to service or replace major items or any items that call for special timing of adjustments procedures (such as valves, governor, etc.). Have this work done by your **Engine Service Dealer.**

ENGINE TROUBLESHOOTING TABLE

PROBLEM	NO FUEL	IMPROPER FUEL	DIRT IN FUEL LINE	DIRTY AIR FILTER	FAULTY SPARK PLUG	ENGINE OVERLOADED	BLOCKED FUEL FILTER	INCORRECT OIL LEVEL	DIRTY AIR SCREEN
Will not start	X		X	X	X	X	X		
Hard starting	X	X	X	X	X	X	X		
Stops suddenly	X		X	X		X	X	X	X
Lacks power		X	X	X	X	X	X	X	X
Operates erratically		X	X	X	X	X	X		X
Knocks or pings		X				X			X
Skips or misfires		X	X	X	X				X
Backfires			X	X	X	X			
Overheats			X	X		X		X	X
High fuel consumption				X	X	X			X

7. ELECTRICAL DIAGRAM

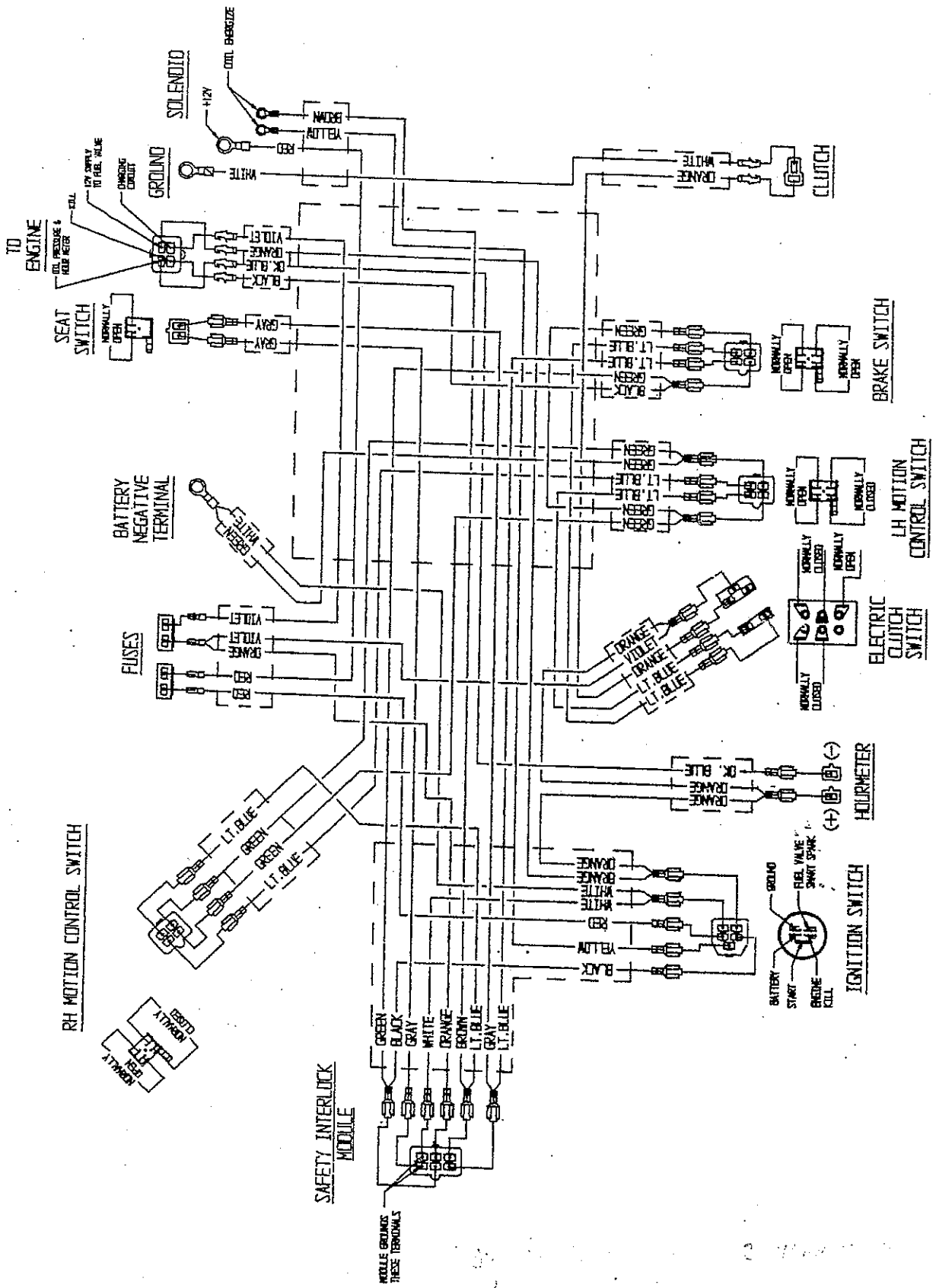

8. HYDRAULIC DIAGRAM

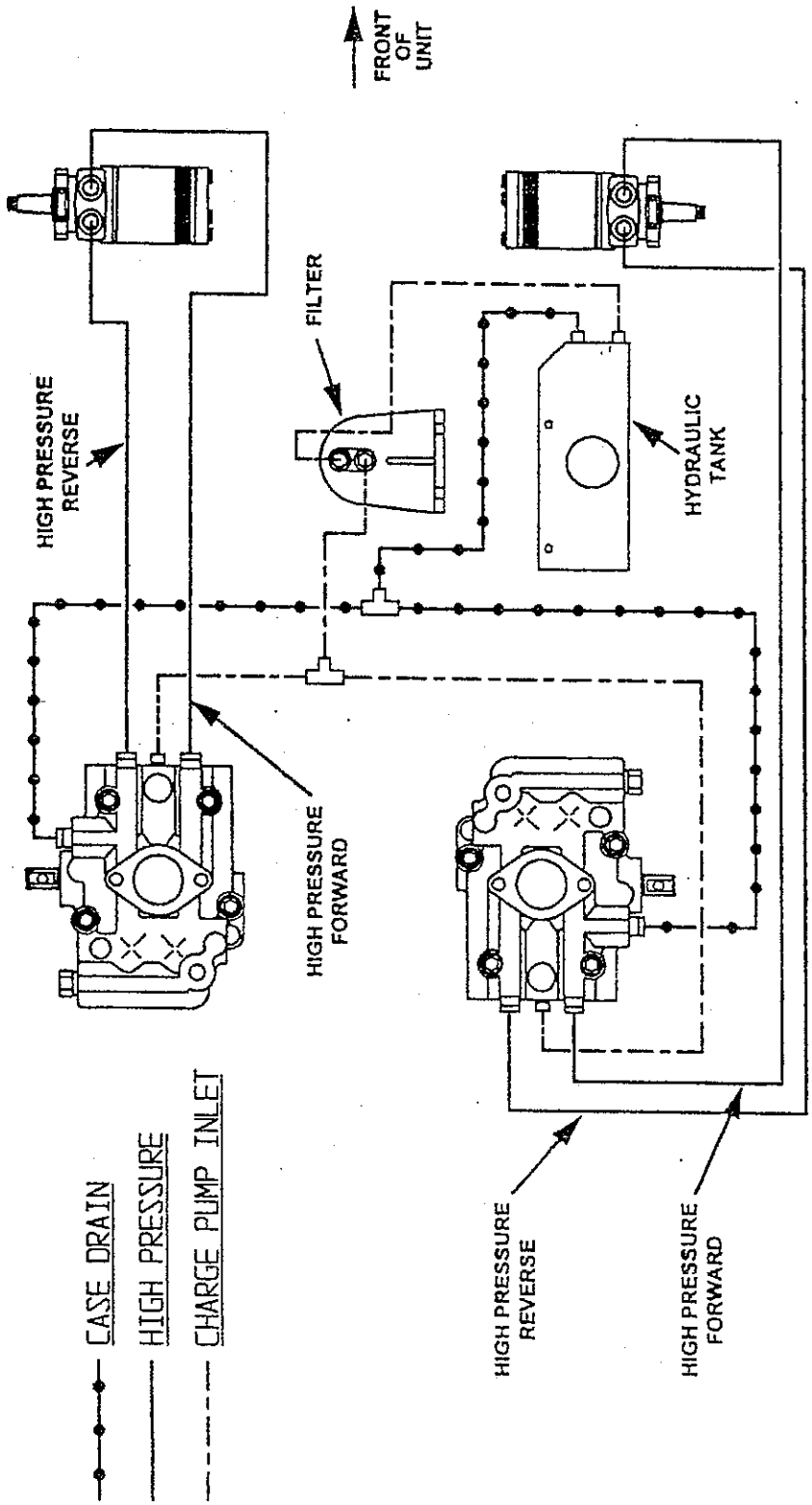

9. WARRANTY

Limited Warranty Exmark Commercial Turf Equipment Exmark Mfg. Co. Inc. ("Exmark") warrants on the terms and conditions herein, that it will repair, replace or adjust any part manufactured by Exmark and found by Exmark(in the exercise of its reasonable discretion)to be defective in factory material or workmanship.

This warranty is limited to one year from the date of original retail purchase (90 days for rental use) for any Exmark mower that is used for commercial or any other income producing purpose. The hydrostatic traction drive system will be warranted for two full years from date of original retail purchase against defects in materials or workmanship excluding hoses. Exmark Mfg will extend the Peerless5-speed transmission manufacturer's warranty from 90 days to one year. Belts and tires are warranted for 90 days against defects in materials or workmanship.

The engine warranty is covered by its respective engine manufacturer. Please refer to the engine manufacturers warranty statement that is included in the literature packet. Exmark is not authorized to handle warranty adjustments on engines. Engine warranties should be referred to the nearest authorized service outlet of the engine manufacturer.

This warranty extends only to the original retail purchaser of the equipment. The warranty may not be assigned or transferred without the prior express written consent of Exmark. The warranty commences upon the date of the original retail purchase.

The Exmark turf equipment, including any defective part, must be returned to an authorized Exmark service dealer within the warranty period. The warranty shall extend to cost to repair or replace(as determined by Exmark) the defective part, including labor. The expense of delivering the mower to the dealer for warranty work and the expense of returning it back to the owner after repair or replacement will be paid for by the owner. Exmark's responsibility in respect to claims is limited to making the required repairs or replacements, and no claim of breach of warranty shall be cause for cancellation or rescission of the contract of sale of any Exmark mower. Proof of purchase may be required by the dealer to substantiate any warranty claim. All warranty work must be performed by an authorized Exmark service dealer.

This warranty extends only to turf equipment operated under normal conditions and properly serviced and maintained. The warranty expressly does not cover: (i) any defects, damage or deterioration due to normal use, wear and tear, or exposure; (ii) normal maintenance services, such as oil change, cleaning, lubrication; (iii) replacement of service items, such as oil, lubricants, spark plugs, belts, rubber hoses or other items subject to normal service replacement; (iv) damage or defects arising out of or relating to misuse, neglect, alteration, negligence or accident; (v) repair or replacement arising from operation of or use of the turf equipment which is not in accordance with operating instructions as specified in the operator's manual or other operational instructions provided by Exmark; (vi) repair or replacement arising as a result of any operation from turf equipment that has been altered or modified so as to, in the determination of Exmark, adversely

affect the operation, performance or durability of the equipment or that has altered, modified or affected the turf equipment so as to change the intended use of the product; (vii) repair or replacement necessitated by use of parts, accessories or supplies, including gasoline, oil or lubricants, incompatible with the turf equipment or other than as recommended in the operator's manual or other operational instructions provided by Exmark; (viii) repairs or replacements resulting from parts or accessories which have adversely affected the operation, performance or durability of the turf equipment; or (ix) damage or defects due to or arising out of repair of turf equipment by person or persons other than an authorized Exmark service dealer or the installation of parts other than genuine Exmark or Exmark recommended parts.

As a condition to this warranty, customer shall have read the operator's manual and shall have returned to Exmark, within the prescribed time, the enclosed warranty registration card.

The sole liability of Exmark with respect to this warranty shall be repair and replacement as set forth herein. Exmark shall have no liability for any other cost, loss or damage, including but not limited to, any incidental or consequential loss or damage. In particular, Exmark shall have no liability or responsibility for: (i) expenses relating to gasoline, oil or lubricants; (ii) loss, cost or expense relating to transportation or delivery of turf equipment from the location of owner or location where used by owner to or from any authorized Exmark service dealer; (iii) travel time, overtime, after hours time or other extraordinary repair charges or charge relating to repairs or replacements outside of normal business hours at the place of business of the authorized Exmark service dealer; (iv) rental of like or similar replacement equipment during the period of any warranty, repair or replacement work; (v) any telephone or telegram charges or travel charges; (vi) loss or damage to person or property other than that covered by the terms of this warranty; (vii) any claims for lost revenue, lost profit or additional cost as a result of a claim of breach of warranty; or (viii) attorney's fees.

There are no representations or warranties which have been authorized and provided to the buyer of the turf equipment, other than as set forth in this warranty. Any and all statements or representations made by any seller of this equipment, including those set forth in any sales literature or made orally by any sales representative, are superseded by the terms of this warranty. Any affirmation of fact or promise made by Exmark or any of its representatives to the buyer which relates to the goods that are the subject of this warranty shall not be regarded as part of the basis of the bargain and shall not be deemed to create any express warranty that such goods shall conform to the affirmation or promise.

THERE ARE NO UNDERSTANDINGS, AGREEMENTS, REPRESENTATIONS, OR WARRANTIES, EXPRESS OR IMPLIED (INCLUDING BUT NOT LIMITED TO ANY REGARDING THE MERCHANTABILITY OR FITNESS FOR A PARTICULAR PURPOSE), NOT SPECIFIED HEREIN, RESPECTING THE EQUIPMENT WHICH IS THE SUBJECT OF THIS WARRANTY.

This warranty applies to all Exmark turf equipment sold in the United States and Canada and intended to be used for commercial purposes.

NOTES

NOTES

SERVICE RECORD

Date	Description of Work Done	Service Done By

SEE EXMARK'S COMPLETE LINE OF PRODUCTS FOR TURF CARE

LAZER Z

EXPLORER

EXPLORER II

TURF RANGER

TURF TRACER HYDRO

VIKING 5-SPEED

VIKING HYDRO

METRO

SELF STEERING SULKY

GRASS CATCHER

MICRO-MULCHING ACCESSORY

EXMARK MFG. CO. INC.
INDUSTRIAL PARK BOX 808
BEATRICE, NE. 68310

PART NO. 850388

(402) 223-4010
FAX (402) 223-4154

ALL RIGHTS RESERVED

PRINTED IN U.S.A.

exmark MFG. CO. INC.