For Serial Nos. 160,000 thru 189,999
and 190,000 & Higher

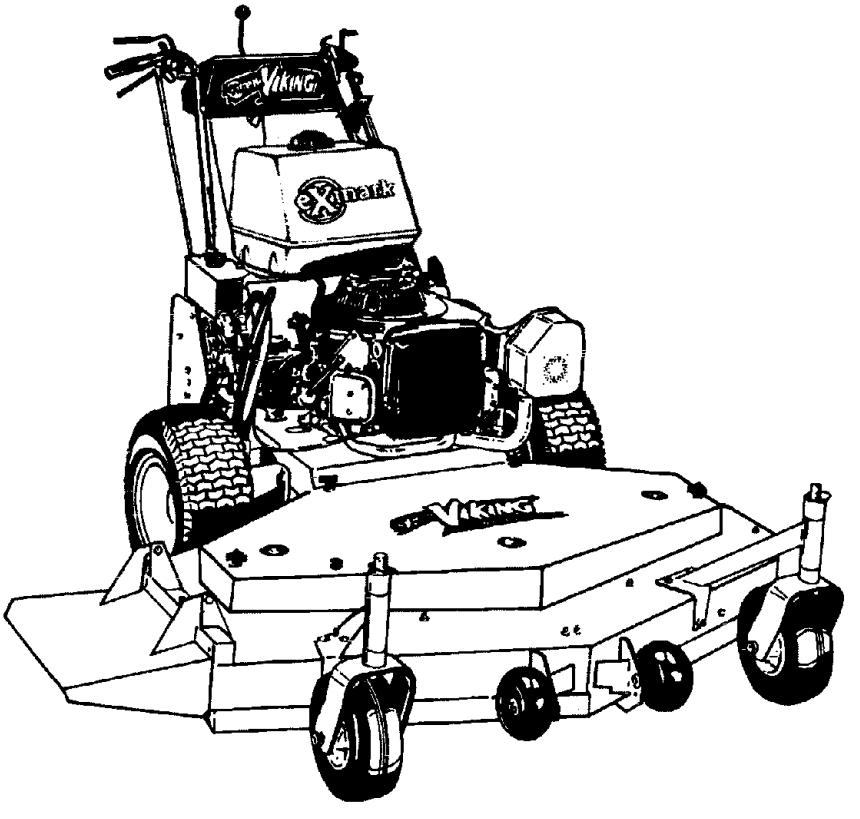


# VIKING HYDRO

OPERATOR'S MANUAL

CONGRATULATIONS on the purchase of your new Exmark mower. This product has been carefully designed and manufactured to give you a maximum amount of dependability and years of trouble-free operation.

If additional information is needed, or should you require trained mechanic service, contact your authorized Exmark equipment dealer or distributor.

If you need to order replacement parts from your dealer, always give the model number and serial number of your mower as well as the part number, description and quantity of the part needed.

The Serial No. plate is located on top front engine frame on the right hand side of the machine.

For ease of ordering and reference, we suggest that you record the information requested in the following identification table.

Model No. _____

Serial No. _____

Engine Model No. _____

Engine Serial No. _____

Date Purchased _____

Paste Label From
Literature Packet Here

## ⚠ WARNING

**FAILURE TO FOLLOW CAUTIOUS OPERATING PRACTICES CAN RESULT IN SERIOUS OPERATOR INJURY.**

## ⚠ CAUTION

1. Keep all shields, guards and safety devices (especially grass discharge system) in place and in proper working condition.
2. Stop engine and remove spark plug wire(s) or remove key before adjusting, servicing, or performing maintenance.
3. When mower deck becomes clogged, stop engine and remove spark plug wire(s) or remove key before cleaning blockage.
4. Keep hands, feet, and clothing away from power driven parts.
5. Keep off mower unless seat platform is provided.
6. Keep others off mower.

## ⚠ WARNING

The engine exhaust from this product contains chemicals known to the State of California to cause cancer, birth defects, or other reproductive harm.

## ⚠ HEALTH WARNING

### GASOLINE

Harmful or fatal if swallowed. Long-term exposure to vapors has caused cancer in laboratory animals.

- Avoid prolonged breathing of vapors.
- Keep face away from nozzle and gas tank/container opening.
- Keep away from eyes and skin.
- Never siphon by mouth.

Failure to use caution may cause serious injury or illness.

### IMPORTANT

When mower is used or operated on any California forest, brush or grass covered land, a working order spark arrester must be attached to muffler. If not, the operator is violating state law, Section 442 Public Resource Code. To acquire a spark arrester for your unit, see your Engine Service Dealer.

Exmark reserves the right to make changes or add improvements to its products at any time without incurring any obligation to make such changes to products manufactured previously. Exmark, or its distributors and dealers, accept no responsibility for variations which may be evident in the actual specifications of its products and the statements and descriptions contained in this publication.

# EXMARK PARTS PLUS® PROGRAM

**EFFECTIVE DATE: September 1, 1995**

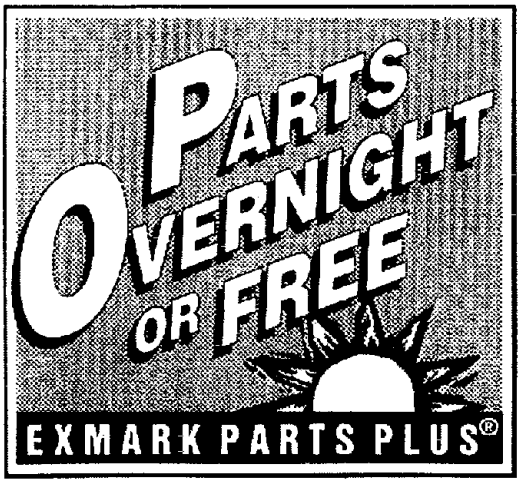


**Program**

If your Exmark dealer does not have the Exmark part in stock, Exmark will get the parts to the dealer the next business day or the part will be FREE* Guaranteed!!

***How the Program Works***

1. If dealer does not have part in stock for a "down" unit at the time of request by customer, the dealer contacts his distributor by 1:00 p.m., local time, and requests Exmark Parts Plus® shipment of six (6) line items or less.

2. Distributor ships part(s) to dealer or customer, as requested by dealer, same day, overnight UPS Distributor bills dealer for part and freight charges where applicable.

3. If distributor does not have the part(s) in stock to satisfy Exmark Parts Plus® order, he contacts Exmark by 3:00 p.m., central time, with an Exmark Parts Plus® order of six (6) line items or less.

4. If order is received by 3:00 p.m. central time, Exmark ships part(s) direct to dealer or customer, as requested by distributor, same day, overnight UPS Exmark bills the distributor for parts and shipping charges, where applicable.

5. The customer pays for the <u>part</u> and <u>freight</u> if it is shipped under the Exmark Parts Plus® and if it arrives in accordance to the program.

6. Who pays for the <u>part</u> and <u>freight</u> if it fails to arrive overnight in accordance to the program?

   A. Under any circumstance the customer does not pay.

   B. If the part does not arrive overnight due to:

      1. The dealer not submitting the Exmark Parts Plus® order to his Exmark distributor by 1:00 p.m., the dealer pays for the part and freight.

      2. The Distributor being unable to ship the part the same day or not submitting the Exmark Parts Plus® order to Exmark by 3:00 p.m., central time, the Distributor pays for the part and freight.

      3. Exmark being unable to ship the part and the Exmark parts order is received by 3:00 p.m., central time, Exmark pays for the part and freight.

      4. If the part does not arrive overnight due to the shipper (UPS), the shipper pays for the freight and Exmark pays for the part.

<u>**The following restrictions apply**</u> -- The Exmark Parts Plus® Program is available only through participating Exmark Dealers and applies only to orders submitted on this program Monday through Thursday. UPS has initiated a Saturday delivery program to many areas of the continental United States and can be requested for an overnight shipment on Friday to be delivered Saturday. The next day air charge, plus the Saturday delivery fee will be the responsibility of the purchaser. Exmark Mfg. will assume no responsibility for Saturday delivery shipments. To qualify, all Exmark Parts Plus® orders must be received by Exmark by 3:00 p.m., central time. Orders must be six (6) line items or less. Exclusions from the Exmark Parts Plus® Program are: Any wholegood or accessory in its entirety, engines and engine replacement parts, 5-speed Peerless transmissions and 5-speed transaxles, hydraulic or hydrostatic wheel motors, cutter decks and engine decks or any item exceeding United Parcel Service size and weight restrictions.

Due to UPS restrictions, aerosol spray paint is considered a hazardous material and cannot be shipped via UPS next day or Second Day Air.

Exmark Manufacturing stocks a limited supply of parts for transaxles, pumps and wheel motors. These parts can be ordered for Next Day Air shipment but will not be guaranteed per the Parts Plus Program.

**CONGRATULATIONS** on the purchase of your Exmark Mower. This product has been carefully designed and manufactured to give you a maximum amount of dependability and years of trouble-free operation.

## OPERATOR'S MANUAL

This manual contains assembly, operating, maintenance, adjustment and safety instructions for your Exmark mower.

**BEFORE OPERATING YOUR MOWER, CAREFULLY READ THIS MANUAL IN ITS ENTIRETY.**

By following the operating, maintenance and safety instructions, you will prolong the life of your mower, maintain its maximum efficiency and promote safe operation.

If additional information is needed, or should you require trained mechanic service, contact your authorized Exmark equipment dealer or distributor.

All Exmark equipment dealers and distributors are kept informed of the latest methods of servicing and are equipped to provide prompt and efficient service in the field or at their service stations. They carry ample stock of service parts or can secure them promptly for you from the factory.

All Exmark parts are thoroughly tested and inspected before leaving the factory, however, attention is required on your part if you are to obtain the fullest measure of satisfaction and performance.

# TABLE OF CONTENTS


**1. SAFETY ..... PAGE**

1.1 Safety Alert Symbol ..... 1
1.2 Training ..... 1
1.3 Preparation ..... 1 - 2
1.4 Operation ..... 2 - 3
1.5 Maintenance & Storage ..... 4
1.6 Riding Attachments ..... 5
1.7 Safety Signs ..... 5 - 6

**2. SPECIFICATIONS**

2.1 Model Number ..... 7
2.2 Engine ..... 7
2.3 Fuel System ..... 7
2.4 Safety Interlock System ..... 7
2.5 Steering/Brake Control ..... 7
2.6 Transmission ..... 7
2.7 Wheel Drive System ..... 7
2.8 Tires ..... 7
2.9 Deck ..... 8
2.10 Dimensions ..... 8
2.11 Torque Requirements ..... 8

**3. ASSEMBLY INSTRUCTIONS**

3.1 to 3.23 Assembly ..... 9 - 12

**4. OPERATION INSTRUCTIONS**

4.1 Controls ..... 12 - 14
4.2 Pre-Start ..... 14
4.3 Operation Instructions ..... 14 - 16
4.4 Transporting ..... 16

**5. MAINTENANCE & ADJUSTMENTS**

5.1 Periodic Maintenance ..... 16 - 23
5.2 Adjustments ..... 23 - 31

**6. TROUBLE SHOOTING**

6.1 Mower Tacks Left or Right ..... 31
6.2 Mower Cuts Unevenly ..... 31
6.3 Blades Do Not Stop When Disengaged ..... 31
6.4 Engine Will Not Start ..... 31 - 32

**7. BELT ROUTING (MOWER DECKS) ..... 33**

**8. WIRING DIAGRAM ..... 34**

**9. HYDRAULIC DIAGRAM ..... 35**

**10. WARRANTY ..... 36 - 37**

# 1. SAFETY

## 1.1 SAFETY ALERT SYMBOL

**THIS SAFETY ALERT SYMBOL ⚠ IS USED BOTH IN THIS MANUAL AND ON THE MACHINE TO IDENTIFY IMPORTANT SAFETY MESSAGES WHICH MUST BE FOLLOWED TO AVOID ACCIDENTS. THIS SYMBOL MEANS:**

**ATTENTION! BECOME ALERT!**
**YOUR SAFETY IS INVOLVED!**

The safety alert symbol appears above information which alerts you of unsafe actions or situations and will be followed by the word **DANGER**, **WARNING**, or **CAUTION.**

**When used with the word DANGER: IT DENOTES THAT AN EXTREME HAZARD EXISTS WHICH WOULD RESULT IN HIGH PROBABILITY OF DEATH OR IRREPARABLE INJURY IF PROPER PRECAUTIONS ARE NOT TAKEN.**

**When used with the word WARNING: IT DENOTES THAT A HAZARD EXISTS WHICH CAN RESULT IN INJURY OR DEATH IF PROPER PRECAUTIONS ARE NOT TAKEN.**

**When used with the word CAUTION: IT DENOTES A REMINDER OF SAFETY PRACTICES OR DIRECTS ATTENTION TO UNSAFE PRACTICES WHICH COULD RESULT IN PERSONAL INJURY IF PROPER PRECAUTIONS ARE NOT TAKEN.**

## 1.2 TRAINING

1.2.1 Regard the Exmark mower as a piece of power equipment and teach this regard to all who operate this unit.

1.2.2 Read the instructions carefully. Familiarize yourself with the controls and the proper use of the equipment.

1.2.3 Never allow children, teenagers, or people unfamiliar with these instructions to use the mower.

1.2.4 Avoid mowing while people, especially children or pets, are nearby. Keep in mind that the operator or user is responsible for accidents or hazards occurring to other people or their property.

## 1.3 PREPARATION

1.3.1 The use of personal protective equipment, such as (but not limited to) protection for the eyes, ears, feet and head is recommended.

1.3.2 While mowing, always wear substantial footwear and long trousers. Do not operate equipment when barefoot or when wearing open sandals.

1.3.3 Thoroughly inspect the area where the equipment is to be used and remove all stones, sticks, wires, bones and other foreign objects which may damage the equipment or cause personal injury to the operator or bystanders.

## ⚠ WARNING

- **Fuel is *Highly Flammable. DO NOT* smoke while refueling. Refuel only in a well ventilated area, or refuel outdoors.**
- **Store fuel in containers specifically designed for this purpose.**
- **Add fuel before starting the engine. *Never* remove the cap of the fuel tank or add fuel when engine is running or when the engine is hot.**
- **Never fill the fuel tank so that the fuel level rises above a level that is a 1/2" below the bottom of the filler neck to allow for fuel expansion and prevent fuel spillage.**
- **If fuel is spilled, *DO NOT* attempt to start the engine. Move away from the area of the spill and avoid creating any source of ignition until fuel vapors have dissipated.**

### 1.4 OPERATION

1.4.1 Give complete, undivided attention to the job at hand.

1.4.2 Mow only in daylight or good artificial light. ***Do Not*** operate the mower when children or others are in the area!

1.4.3 When feasible, avoid operating the equipment in wet grass.

1.4.4 Use **EXTREME** caution when mowing and/or turning on slopes as loss of traction and/or control could occur. Mow **across** slopes with walk behind mowers, never up and down. Loss of control and/or loss of operator's footing could result in a fall with an arm or leg getting under the mower or engine deck and sustaining serious injury. Drive slower on slopes. ***DO NOT*** operate on slopes greater than 20 degrees. Watch for ditches, holes, rocks, dips, and rises which can cause erratic handlebar movement and loss of footing. Keep away from drop-offs and steep banks. Avoid sudden starts. Look down and behind you before and while moving backwards. ***DO NOT*** mow slopes when grass is wet - slippery conditions create hazardous footing, affect steering, and reduce traction and braking. The operator is responsible for safe operation on slopes. See inside back cover to determine the approximate slope angle of the area to be mowed.

1.4.5 Stop the blades when crossing surfaces other than grass; and when transporting the mower to and from the area to be mowed.

1.4.6 Never operate the mower with defective guards, shields, or covers. Always have safety shields, guards, switches, and other devices in place and in proper working condition.

1.4.7 ***Do Not*** change the engine governor settings or over speed. the engine. Operating an engine at excessive speed may increase the hazard of personal injury.

1.4.8 Place transmission in neutral, disengage blade drive before starting engine

1.4.9 Start the engine carefully with feet well away from the blades.

1.4.10 Keep hands, feet and clothing away from rotating parts while the mower is being operated.

1.4.11 Stop the engine and remove plug wire(s) or ignition key:

- Before checking, cleaning or working on the mower.
- After striking a foreign object (inspect the mower for damage and make repairs before restarting and operating the mower).

1.4.12 Stop the engine:

- Before clearing blockages.
- Whenever you leave the mower.
- Before removing the grass catcher.
- Before refueling.
- Before making height adjustments.

1.4.13 Before stopping the engine, return the throttle control to the idle position for 30 seconds to allow the engine to cool down.

1.4.14 The fuel system is provided with a shut-off valve. The fuel shut-off valve is used to shut off the fuel when:

- The machine will not be used for a few days.
- During transport to and from the job.
- When parking inside a building.

1.4.15 This mower was designed for one operator only. Keep all others away from mower during operation.

1.4.16 ***Do Not*** mow without the grass deflector or entire grass collection system in place and in proper working condition.

**⚠ DANGER**

- ***DO NOT*** **operate the engine in a small confined area where dangerous carbon monoxide fumes can collect.**

**⚠ CAUTION**

- **Failure to follow safety instructions and cautious operating practices can result in serious injury.**

**⚠ CAUTION**

- **Although hazard control and accident prevention partially are dependent upon the design and configuration of the equipment, these factors are also dependent upon the awareness, concern, prudence and proper training of the personnel involved in the operation, transport, maintenance and storage of the equipment. It is essential that all Operator Safety Mechanisms be connected and in operating condition prior to use for mowing.**

## 1.5 MAINTENANCE AND STORAGE

1.5.1 For engine maintenance, follow the engine manufacture's recommendations precisely as stated in the engine manual.

1.5.2 If carburetor adjustment is necessary, stand to one side and keep feet and hands clear while making adjustments.

1.5.3 Keep engine and engine area free from accumulation of grass, leaves, excessive grease or oil and other debris which can accumulate in these areas. These materials can become combustible and may result in a fire.

1.5.4 Store fuel in a container specifically designed for this purpose in a cool, dry place.

1.5.5 Keep the mower and fuel container in locked storage to prevent children from playing or tampering with them.

1.5.6 Gasoline powered equipment or fuel containers should not be stored in a basement or any enclosed area, where open pilot lights or heat appliances are present.

1.5.7 Maximum mowing results and safety can only be achieved if the mower is properly maintained and operated correctly.

1.5.8. Check all bolts frequently to maintain proper tightness.

1.5.9. Keep all guards, shields and all safety devices in place and in safe working condition.

1.5.10 Frequently check for worn or deteriorating components that could create a hazard.

1.5.11 All replacement parts must be the same as or equivalent to the parts supplied as original equipment.

**⚠ CAUTION**

- **Make sure all hydraulic fluid hoses and lines are in good condition and all hydraulic connections and fittings are tight before applying pressure to hydraulic system.**

**⚠ CAUTION**

- **Hydraulic fluid escaping under pressure may have sufficient force to penetrate skin and cause serious injury. If foreign fluid is injected into the skin, it must be surgically removed within a few hours by a doctor familiar with this type of injury or gangrene may result.**

**⚠ CAUTION**

- **Keep body and hands away from pin holes or nozzles that eject hydraulic fluid fluid under high pressure. Use paper or cardboard, *NOT HANDS* to search for leaks.**

**⚠ CAUTION**

- **Safely relieve all pressure in the hydraulic system before disconnecting lines or before performing any work on the hydraulic system.**

## 1.6 RIDING ATTACHMENTS

1.6.1 Use <u>only</u> **Exmark** riding attachments. The use of other than Exmark riding attachments may create a hazardous condition resulting in injury.

## 1.7 SAFETY SIGNS

1.7.1 Keep all safety signs legible. Remove all grease, dirt and debris from safety signs.

1.7.2 Safety signs must be replaced if they are missing or illegible.

1.7.3 When new components are installed, be sure that current safety signs are affixed to the replaced components.

1.7.4 New safety signs may be obtained from your authorized Exmark equipment dealer or distributor or from Exmark Mfg. Co. Inc.

1.7.5 Safety signs may be affixed by peeling off the backing to expose the adhesive surface. Apply only to a clean, dry surface. Smooth to remove any air bubbles.

1.7.6 Familiarize yourself with the following safety signs and instruction labels. They are critical to the safe operation of your Exmark commercial mower.

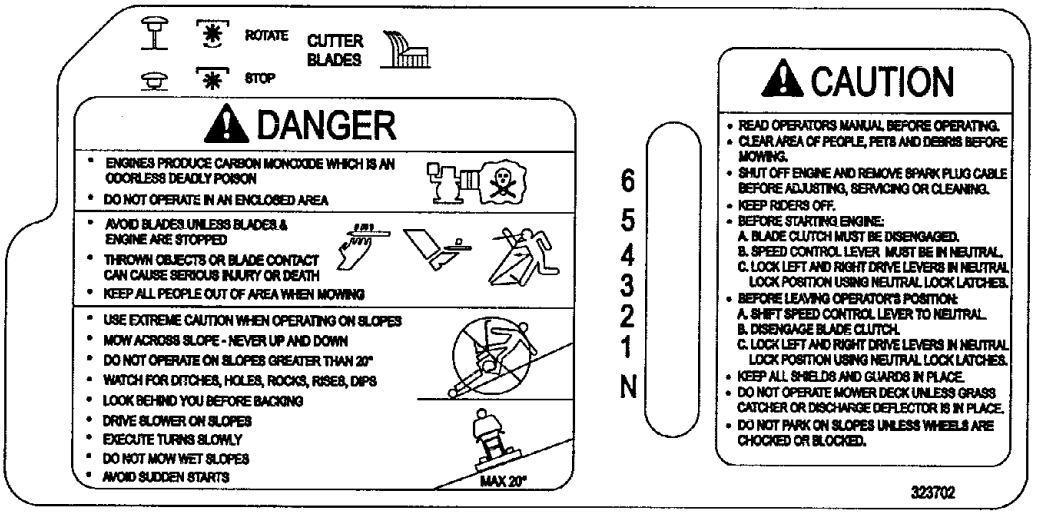


PART NO. 323702
LOCATION: Console

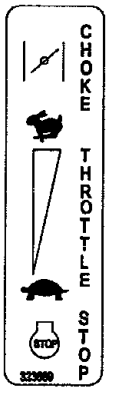


PART NO. 323689
LOCATION: RH Side of Console

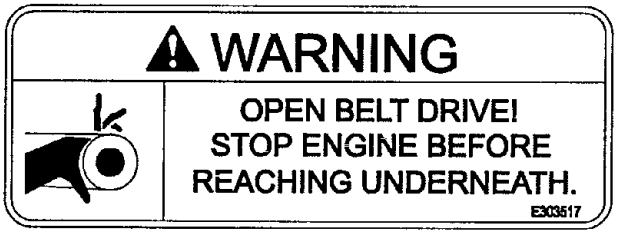


PART NO. 303517
LOCATION: Left Side of Rear Surface on Engine Deck

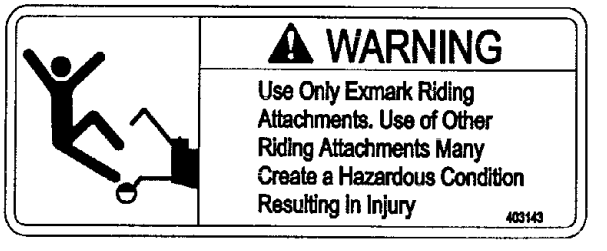


PART NO. 403143
LOCATION: Right Side of Rear Surface on Engine Deck

PART NO. 403005
LOCATION: Front Corners of Mower Deck

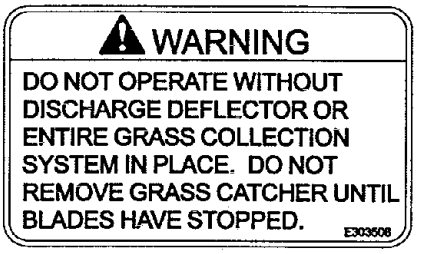


PART NO. 303508
LOCATION: On Top Rear Right Hand Surface of Mower Deck

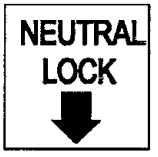


PART NO. 303102
LOCATION: Upper Handle

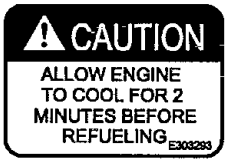


PART NO. 303293
LOCATION: On Top Right Side of Fuel Tank

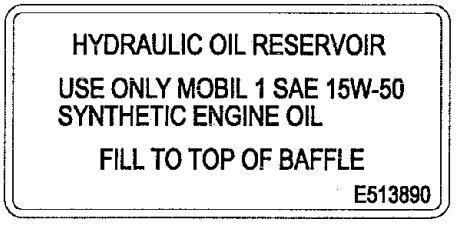


PART NO. 513890
LOCATION: On Top of Hydraulic Tank

PART NO. 513746
LOCATION: On Engine Blower Housing Next to Muffler

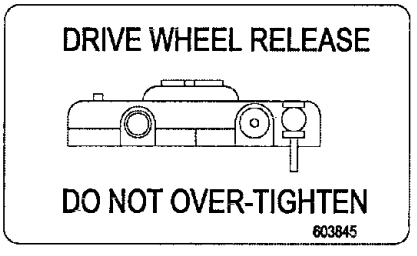


PART NO. 603845
LOCATION: Rear Center of Top Surface of Engine Deck

PART NO. 413214
LOCATION: Right Side of Hydro Control Crank Arm

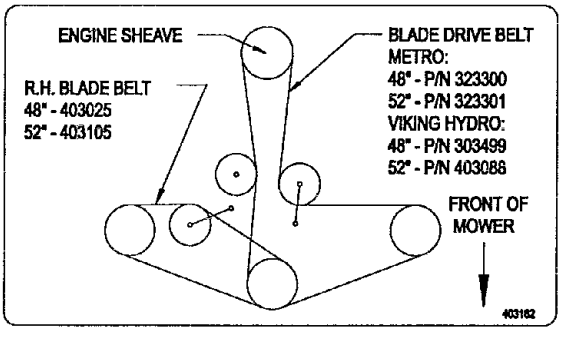


PART NO. 403162
LOCATION: 48" Deck

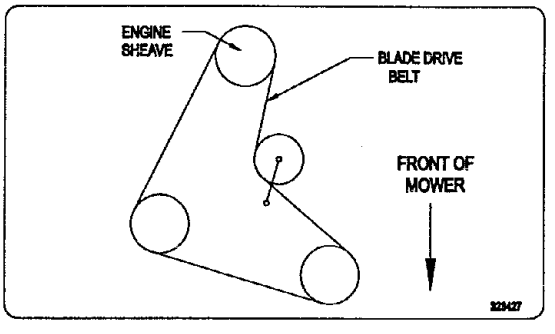


PART NO. 323427
LOCATION: 36" Deck

## 2. SPECIFICATIONS

### 2.1 MODEL NUMBER:

| **Serial No.s 160,000-189,999** | **Serial No.s 160,000 & Higher** |
|---|---|
| VH3615KC; VH4815KC | VH3614KA; VH4814KA; |

### 2.2 ENGINE

2.2.1 Engine Specifications:
See your Engine Owner's Manual.

2.2.2 3600 RPM (No Load).

### 2.3 FUEL SYSTEM

2.3.1 Capacity: 5.0 gal.(18.9 L.)

2.3.2 Type of Fuel: Regular ***unleaded*** gasoline, 87 octane or higher. In countries using the research method, it should be a 90 octane *minimum*.

2.3.3 Fuel Filter: Replaceable in-line

2.3.4 Fuel Shut-Off Valve: 1/4 turn

### 2.4: SAFETY INTERLOCK SYSTEM

Operator must have transmission in neutral and blade clutch disengaged to start engine. Release of OPC levers will cause the engine to stop if *hydro transmission is **not** in neutral* and/or *blade clutch is **engaged***.

### 2.5 STEERING/BRAKE CONTROL:

Fingertip drive control levers provide independent speed control, braking and neutral to each drive wheel for moving forward or reverse, stopping and power turning.

### 2.6 TRANSMISSION:

Twin Hydrostatic Drive

2.6.1 Two Hydro Gear BDP-10L series variable displacement pumps independently coupled to two high efficiency Parker/Ross wheel drive motors.

2.6.2 Hydraulic Filter is replaceable cartridge type.
P/N 513211: 10 microns, 18 psi bypass (Summer use above 32° F)
P/N 523541: 40 microns, 18 psi bypass (Winter use below 32° F)

2.6.3 Speed Range: Forward 0 - 6.2 mph (10.0 km/h)
Reverse 0 - 2.2 mph (3.5 km/h)

### 2.7 WHEEL DRIVE SYSTEM:

Drive wheels are direct coupled to Parker/Ross wheel drive motors with 1.0" (25.4 mm) tapered shaft.

### 2.8 TIRES

| | Drive | Front Caster |
|---|---|---|
| Size | 16 x 6.50-8 | 9 x 3.50-4 |
| Quantity | 2 | 2 |
| Tread | Turf Saver/Turf Master | Smooth |
| Ply Rating | 4 | 4 |
| Pressure | 14 psi(97 kPa) | 22 psi(152 kPa) |

## 2.9 DECK

2.9.1 Cutting Width:

Model 36 in..... 35.38 in.(89.9 cm)

Model 48 in..... 47.24 in.(120.0 cm)

2.9.2 Discharge: Right Side

2.9.3 Blade Size:

Model 36 in.....18.00 in.(45.7 cm) ..Qty. 2

Model 48 in.....16.25 in.(41.3 cm) ..Qty. 3

2.9.4 Type of Drive: Manual engagement of belt with over-center lock. Belt tension is adjustable via turnbuckle. The 48" units have an additional belt; also adjustable.

2.9.5 Deck Mounting: Bolted directly to the engine deck.

2.9.6 Cutting Height: Adjusts in 1/4" (.63 cm) increments from 1" (2.5 cm) to 4 1/4" (10.8 cm).

## 2.10 DIMENSIONS

2.10.1 Overall Width:

| | 36" | 48" |
|---|---|---|
| **Discharge chute down** | 46.1" (117.1 cm) | 58.2" (148.0 cm) |
| **Discharge chute up (Transport only)** | 36.4" (92.5 cm) | 48.1" (122.2 cm) |

2.10.2 Overall Length:

| | 36" | 48" |
|---|---|---|
| **Overall Length** | 78.0" (198.1 cm) | 73.0" (185.4 cm) |

2.10.3 Curb Weight:

| | 36" | 48" |
|---|---|---|
| **Curb Weight*** | 433 lbs. (196 kg) | 486 lbs. (220 kg) |

* Weights will vary slightly depending on engine option.

2.10.4 Overall Height: 43.2" (109.7 cm)(all units)

2.10.5 Tread Width (to outside of tires):

36" Model ..... 35.6" (90.4 cm)

48" Model ..... 39.6" (100.6 cm

## 2.11 TORQUE REQUIREMENTS

| BOLT LOCATION | TORQUE |
|---|---|
| Blade/Cutter Housing Spindle Bolt ..... | 75-80 ft-lbs. |
| Caster Bracket Mounts ..... | 30-35 ft-lbs. |
| Cutter Deck/Engine Deck Mount ..... | 30-35 ft-lbs. |
| Engine Mounting Bolts | |
| Kohler & Kawasaki ..... | 25-30 ft-lbs. |

## 3. ASSEMBLY INSTRUCTIONS

3.1 Uncrate unit, leaving it on the pallet, place upper handle assembly, fuel tank, and drive linkages at the rear of the machine. Place casters at the front of unit.

3.2 Place a length of 4" x 4" block between the front of the cutter deck and the pallet.

3.3 Remove the bolt bag from the top of the fuel tank support.

3.4 Loosen the 5/16" hardware at the two (2) discharge deflector hinge points so that the deflector is snug, but can be moved up and down freely.

3.5 Refer to Parts Manual to help you identify and locate parts and their proper position.

3.6 Install casters to front of deck using appropriate hardware from the bolt bag (eight 3/8 x 3/4" bolts and eight 3/8" whizlock nuts); tightening the lower four bolts first, then the top four.

3.7 Apply retaining adhesive " Fel-Pro Prolock Retaining I or Retaining II" or " Loctite RC 609 or 680" on the two threaded studs from the bolt bag and install into the two left holes underneath fuel tank. Install the fuel tank on top of the fuel tank support with the studs going through the slots in the support. Install two 5/16 x 3/4 screws with a 5/16 SAE flatwasher and 5/16 lockwasher into the threaded holes in the right side of the fuel tank. ***Do not over-tighten***. Place a 5/16" SAE flatwasher, then a spring, over each of the studs and fasten with a 5/16 nyloc nut. Tighten the 5/16 nylock nut fully than back off a 1/2 turn. This is to allow for normal fuel expansion and contraction with changes in temperature and fuel levels. ***Do not over-tighten.***

3.8 Attach the fuel tank hose to the tank fitting and secure with the clamp provided. Make sure that fuel hose is not between engine and throttle plate on engine.

3.9 Position the lower end of the handle assembly on the outside of the upper rear section of the fuel tank & handle support. Install four 3/8-16 x 1" bolts (with four spring disk washers against the head of each bolt) from the outside in. Secure using four 3/8" whizlock nuts on the inside of each handle support and tighten until the spring disk washers are flat (See Figure 1).

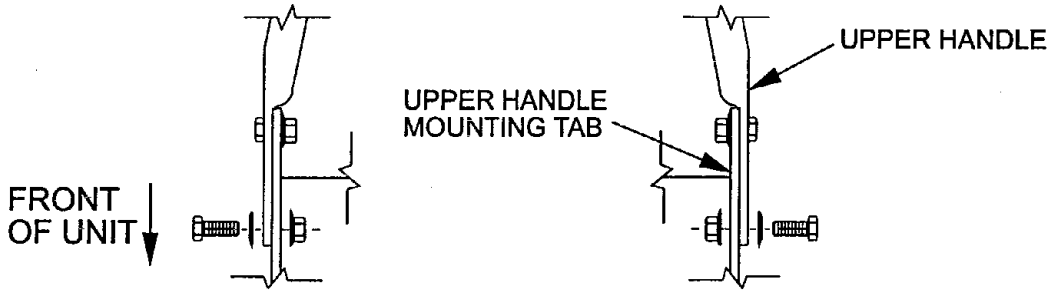


**FIG. 1**
**UPPER HANDLE MOUNTING**

3.10 Route the throttle cable along the right side of the upper handle, under the fuel tank support, and position the cable on the ***left*** side of the engine.

Attach throttle cable to engine:

a) Position the throttle control lever (on console) in the full throttle (but not choke) position. You will feel a detent when the throttle lever is approximately 3/4" from the upper end of the slot (this is full throttle position).

b) Loosen clamp on engine control plate (See Figures 2 & 3). Attach inner wire of the throttle cable to the control plate lever and position cable under cable clamp, ***do not*** tighten clamp.

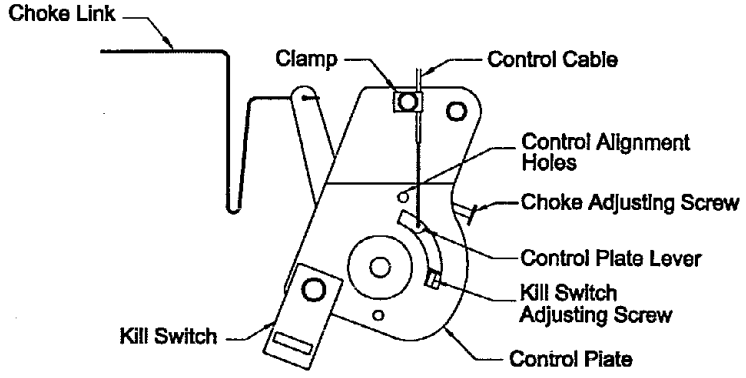


**FIG 2**
**KOHLER SPEED CONTROL**
**(THROTTLE CABLE HOOK-UP)**

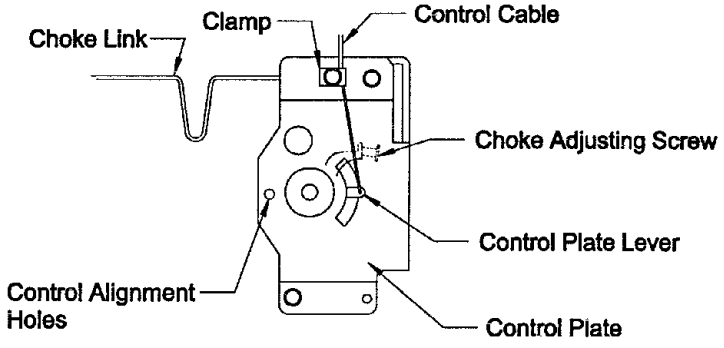


**FIG 3**
**KAWASAKI SPEED CONTROL**
**(THROTTLE CABLE HOOK-UP)**

c) Pull cable upward until alignment holes in control plate lever and control plate line up. For Kawasaki, a 15/64" (6 mm) drill bit can be inserted through these two holes to align them. For Kohler, use a 19/64" drill bit. Once the holes are aligned, tighten clamp onto throttle cable.

d) Be sure the ***choke adjusting screw just contacts the choke lever*** when the throttle control is in the full throttle position. Choke link should not move when throttle control is moved to the full throttle position. Choke must be completely closed when throttle lever is moved to the full forward " CHOKE" position.

e) This step needs to be done after the ***unit has been assembled and the engine has been started***. Refer to Section 4 (Operation Instructions). Check the engine " STOP" position by moving throttle control fully to the rear. (Note: There is a detent toward the end of the slot in the console for " IDLE" ; the " STOP" lower position is rearward from this detent).

For Kohler, if the engine continues to run in the "STOP" position, turn kill switch adjusting screw inward until engine stops, then give it an additional 1/2 to 3/4 turn to assure it will always function properly.

**(Kawasaki kill switch is not adjustable).**

Secure fuel line to throttle control cable with a small wire tie from the bolt bag approximately 2" ahead of filter to keep fuel line away from hydraulic lines to prevent vapor lock.

3.11 Install the blade engagement linkage to the bell crank on the ***front, left hand*** side of the engine deck. Insert rod through the hole from the outside and fasten with hairpin cotter from bolt bag.

3.12 Note the square swivel at the end of the hydro control arm linkage. Place the stud end of the swivel into the hole on the end of the short crank arm located at the end of the speed control crank (top, rear of fuel tank support). Install a 5/16" SAE washer and fasten with a 3/32" x 1/2" cotter pin from bolt bag. Repeat on opposite side of unit (See Figure 4).

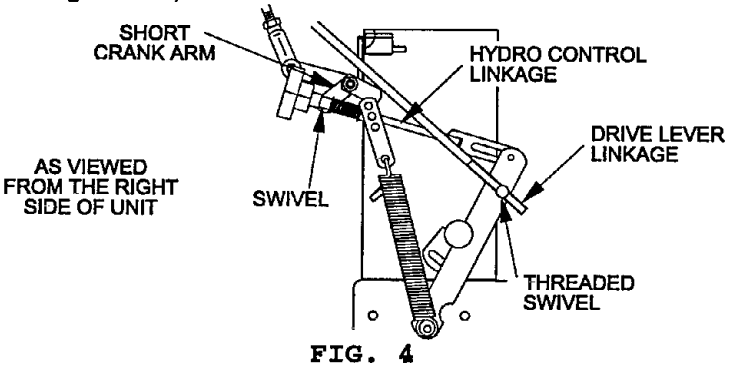


**FIG. 4**
**HYDRO CONTROL LINKAGE SWIVEL & DRIVE LINKAGE SWIVEL**

3.13 Install the speed control rod assembly (linkage with the yoke installed on one end) into the end of the speed control lever located underneath the center of the console. Insert the end of the linkage (opposite the yoke) into the end of the speed control lever from the right hand side and fasten with a hairpin cotter from bolt bag.

3.14 Connect the lower end of the speed control linkage to the speed control crank located at the top rear of the fuel tank support. Secure with clevis pin and hairpin cotter from bolt bag.

3.15 Thread each drive linkage into the threaded swivel. (See Figure 4). Connect the upper end of each drive linkage to the drive levers. Fasten with a long clevis pin and hairpin cotter from bolt bag. Be sure the clevis pin is first inserted through the drive linkage and then through the drive lever from the outside before installing the hairpin cotter (See Figure 5).

**NOTE: There should not be a washer between the neutral lock latch and the hairpin cotter.**

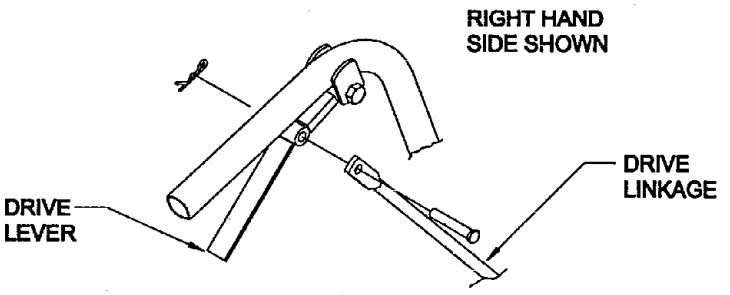


**FIG 5**
**DRIVE LINKAGE TO DRIVE LEVER**

3.16 Route the long unattached wiring harness lead, up the left hand side of the handle and connect the two terminals (in any order) to the operator presence control switch terminals underneath the control console.

Fasten the lead to the handle with two large wire ties from bolt bag, one at the upper end of the handle next to the console, and one at the very lower end of the handle where it attaches to the fuel tank support.

3.17 If machine is shipped without muffler installed, install muffler with hardware provided.

3.18 Service Engine: Refer to Engine Owner's Manual.

3.19 Service Hydraulic Oil: The machine is shipped with hydraulic oil filled to the top of the baffles in the reservoir. Run the machine for approximately 15 minutes to allow any extra air to purge out of the hydraulic system. Check hydraulic reservoir and if necessary fill the reservoir to the appropriate level with Mobil 1 15W-50 synthetic motor oil.

3.20 **GREASE UNIT: NOTE: *UNIT IS NOT GREASED AT THE FACTORY.*** Refer to 5.1.13, for locations and grease amounts.

3.21 Follow pre-start instructions as outlined in 4.2.

**NOTE: After starting the engine and engaging the hydro drive, if either of the drive wheels acts sluggish or will not rotate at all, stop engine and refer to Section 5.1.10 on the Hydraulic System Air Purge procedure.**

3.22 Perform any needed adjustments as outlined in the Adjustment Section.

# 4. OPERATION INSTRUCTIONS

## 4.1 Controls

4.1.1 Operator Presence Control (OPC) Levers: Located on the upper handle assembly directly above the handle grips. ***When these levers are depressed, the OPC system senses that the operator is in the normal operator's position. When the levers are released, the OPC system senses that the operator has moved from the normal operating position*** and will kill the engine if either the speed control lever is ***not in the neutral*** position or the ***blade clutch is engaged.***

4.1.2 Speed Control Lever: Located in middle of control console, it controls the maximum forward speed and is infinitely variable from neutral (0 mph) to 6.2 mph.

4.1.3 Drive Levers: Located on each side of the upper handle assembly directly below the handle grips (See Figure 6). These levers individually control the speed and direction of each drive wheel. When the speed control lever is moved out of the neutral position and the neutral lock latches are moved into the drive position, as shown in Figure 6, and the drive levers are released, the drive wheels are engaged in the forward direction.

Squeezing the left hand and/or right hand lever causes the left hand and/or right hand drive wheel respectively to slow down, stop, or reverse, depending on how far each drive lever is "squeezed". Squeezing the drive levers beyond the neutral position causes the drive wheels to engage in the reverse direction regardless of the position of the neutral lock latches and the speed control lever.

4.1.4 Neutral Lock Latch: Located directly above the drive levers. These latches allow the operator to lock the drive levers in a "neutral" position where neither of the drive wheels are engaged in either a forward or reverse direction (See Figure 6).

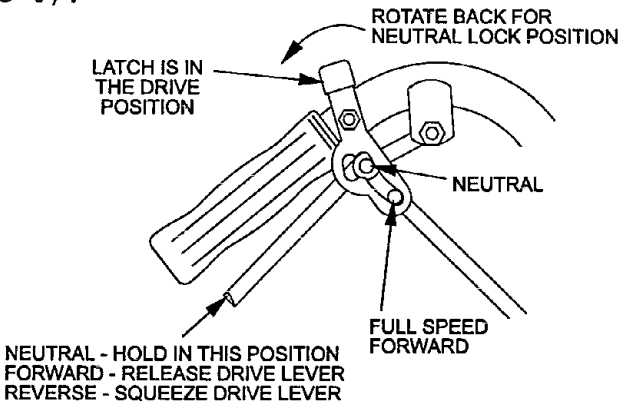


**FIG. 6**
**DRIVE LEVER, NEUTRAL LOCK LATCH OPERATION**

4.1.5 Blade Engagement: The " push/pull" blade engagement knob is located on the left side of the control console. To engage the blades, the knob must be pulled toward the operator until the turnbuckle (attached to the blade engagement idler) locks over-center. To disengage the blades, push the knob down until the bellcrank (front, left on engine deck) contacts the end of the slot in the deck.

4.1.6 Throttle-Choke Control: The throttle-choke control lever is located on the control console right side. Choke aids in starting a cold engine. The choke control is a part of the throttle control and activates by moving the throttle control lever to the full forward position. You will notice a detent at the " full throttle" position (approximately 3/4" from top of slot) continue pushing forward into the " choke" position.

Once the engine has started, move the throttle control lever to the midway point and allow the engine to warm-up before going to full throttle.

All engines are equipped with " throttle kill" as a standard feature. Moving the throttle control lever to the full rear position will kill the engine. You will notice the control lever will fall into a detent at the " idle" position, continuing rearward past this detent will shut off the engine.

4.1.7 Fuel Shut-Off Valve: Installed in the fuel line midway between the tank and engine. The fuel shut-off valve is used to shut off the flow of fuel when parking inside a building, during transportation to and from the job sites, and when the machine will not be used for a few days.

Rotate valve 1/4 turn clockwise to shut fuel off. Rotate valve 1/4 turn counter-clockwise to turn fuel on.

4.1.8 Drive Wheel Release Valves: Located on the top rear corner of the hydrostatic pumps. Drive wheel release valves are used to release the hydro-static drive system to allow the machine to be moved by hand without the engine running. Turn valves one-half turn counterclockwise to release the drive system. Turn clockwise to reset the drive system. ***Do Not over-tighten.***

4.1.9 Cold Start Kit: Located on the right hand side of engine deck, below and slightly ahead of the hydro control shield. The cold start kit is used to ease the starting of the unit in cold weather or when the unit has not been operated for a period of time. The cold start kit moves the idler pulley away from the pump belt, releasing the tension on the belt which allows the engine to turn over with less resistance. See Section 4.3.2.

4.1.10 Tracking Adjustment Knob: Located on the right-hand side of the rear of the fuel tank support. Can be adjusted so that machine will " track" straight ahead with drive levers released.

## 4.2 Pre-Start

4.2.1 Fill fuel tank. For best results use only clean fresh regular grade ***unleaded*** gasoline with an octane rating of 87 or higher. Regular grade leaded gasoline may also be used; however, combustion chamber and cylinder head will require more frequent service. See Engine Owner's Manual.

Do not add oil to gasoline.

Never fill the fuel tank so that the fuel level rises above a level that is 1/2" below the bottom of the filler neck to allow for fuel expansion and prevent fuel spillage.

4.2.2 Refer to Maintenance and Adjustment Section 5 and perform all of the necessary inspection and maintenance steps.

4.2.3 Familiarize yourself with the controls and operation of unit. See Controls section 4.1 and Operating Instructions section 4.3.

## 4.3 OPERATING INSTRUCTIONS

4.3.1 Refer to Engine Owner's Manual for detailed operating instructions regarding the engine.

4.3.2 Starting Engine: Operator must have ***blade drive disengaged*** and ***transmission in neutral***.

***Open*** fuel shut-off valve.

**NOTE: A cold weather starting kit has been added for ease of starting in either cold weather or when the unit has not been run for a period of time.**

To use cold start kit:

a) Place shifter in neutral position.

b) Pull split ring straight out the side of the unit, and hook the ring over the lower front hydro control shield bolt.

c) Start engine. Refer to the following guidelines for further starting suggestions.

To engage pump drive (unhook cold start kit)

a) Pull chain straight out from the side of the unit until the split ring can be removed from the bolt. ***SLOWLY*** release tension on chain.

On a cold engine, place the throttle in the full forward " Choke" position. Pull recoil rope to start engine.

With a cold engine, gradually return choke to the full throttle position after the engine starts and warms up.

**NOTE: Kawasaki engines generally need to be " choked" even when warm.**

On a warm engine, place the throttle control ***midway*** between the " Slow" and " Fast" positions.

**NOTE: It is helpful to have the left and right neutral lock latches applied when starting the engine, See Controls Section 4.1.**

4.3.3 Stopping Engine: Disengage blade drive, shift transmission to neutral and lock the drive levers in neutral. Move throttle to the " Slow" position. Allow engine to idle for 30 seconds to allow cool down. Move the throttle lever to the full rear (" Stop" ) position.

4.3.4 Drive Lever/Neutral Lock Latch Operation: To lock the drive levers in neutral, squeeze the drive levers back to the neutral position.

(***Do Not*** *squeeze the drive levers all the way back as this will cause the drive wheels to go into full reverse direction*) Place thumbs on the upper portion of the neutral lock latches and move them to the rear. Release drive levers (See Figure 6).

**⚠ CAUTION**

- **Be sure the pins protruding through the slots of each neutral lock latch are completely engaged in the rear slot of each latch, if not, the drive levers could unexpectedly slip into the forward drive position.**

To place the drive levers in the drive position, firmly hold the drive levers, place thumbs on the upper portion of the neutral lock latches and move them forward to release drive levers. ***Slowly*** and ***carefully*** release the drive levers.

4.3.5 Drive Wheel Engagement/Turning: With drive levers located in neutral, shift speed control lever to desired forward speed. Slowly squeeze and hold both drive levers in the neutral position and move both neutral lock latches from the neutral lock position. ***Do Not*** squeeze both drive levers all the way back, this will cause the drive wheels to be engaged in the reverse direction.

For straight ahead motion, smoothly release both drive levers to engage drive wheels.

Squeeze the right hand drive lever to turn right and the left hand drive lever to turn left.

To make a " zero turn" , squeeze either the left hand or the right hand drive lever back into the reverse position while the opposite drive lever is in a forward position at an equal but opposite speed.

To back up, squeeze both drive levers into the reverse position.

For smooth operation of this machine, avoid quick, jerky movements of the drive levers. Move the drive levers smoothly and deliberately.

4.3.6 To Stop: Squeeze drive levers back to the neutral position. Move neutral lock latches into the neutral lock position and release drive levers. Move the speed control lever to the neutral position.

4.3.7 Blade Engagement: Be sure that all persons are clear of mower deck and discharge area before engaging the blades. Set throttle to " midway" position. Pull the blade engagement knob up and rearward to engage blades. Accelerate to full throttle to begin mowing (See Section 4.1.5).

4.3.8 Blade Disengagement: Push forward and down completely on the engagement knob to disengage the blades (See Section 4.1.5).

### 4.4 TRANSPORTING

Use a heavy duty trailer to transport the machine. Engage neutral lock latches and block wheels.

Securely fasten the machine to the trailer with straps, chains, cables or ropes.

Use a safety chain and be sure that the trailer has all necessary lighting and marking as required by law.

## 5. MAINTENANCE & ADJUSTMENTS

**⚠ CAUTION**

- **Disengage blade clutch, shut off engine and remove spark plug wire(s) before servicing, cleaning or making adjustments.**
- **The engine can become very hot. Always allow the engine to cool before servicing or making repairs around the engine area.**

### 5.1 PERIODIC MAINTENANCE

5.1.1 Check engine oil level.

Service Interval: **See Engine Owner's Manual**

a) Make sure engine is stopped and on a level surface.

b) Check with engine cool.

c) Clean area around dipstick. Remove dipstick and wipe oil off. Reinsert the dipstick (***DO NOT*** screw into place). Remove dipstick and check oil level.

d) If the oil level is low, add oil as specified in the Engine Owner's Manual to bring the oil level up to the " F" mark on the dipstick. ***DO NOT OVERFILL.***

**IMPORTANT: *DO NOT* operate the engine with oil level below the " L" mark or over the " F" mark.**

5.1.2 Clean engine air cooling system.

Service Interval: **See Engine Owner's Manual**

a) Stop engine and remove spark plug wire(s).

b) Clean all debris from engine air intake screen and from around engine shrouding.

5.1.3 Clean grass build-up under deck and check mower blades.

Service Interval: **Daily**

**⚠ CAUTION**

- **When it is necessary to raise the deck or mower for service or maintenance, *DO NOT* rely solely on mechanical or hydraulic jacks for support. Use adequate jack stands or equivalent support.**

a) Disengage blade clutch.

b) Stop engine and remove spark plug wire(s).

c) Raise deck and block up using proper safety precautions.

d) Clean out any grass build-up from underside of deck and in deck discharge chute.

e) Inspect blades and sharpen or replace as required.

f) If blade removal is necessary, be careful for the sharp cutting edges of the blades.

g) Re-install the blades (if they were removed) and torque blade bolts to 75-80 ft.lbs. Be sure the spring disk washer cone is installed toward the bolt head (See Figure 7).

h) Remove jack stands (or equivalent support) and lower deck to ground.

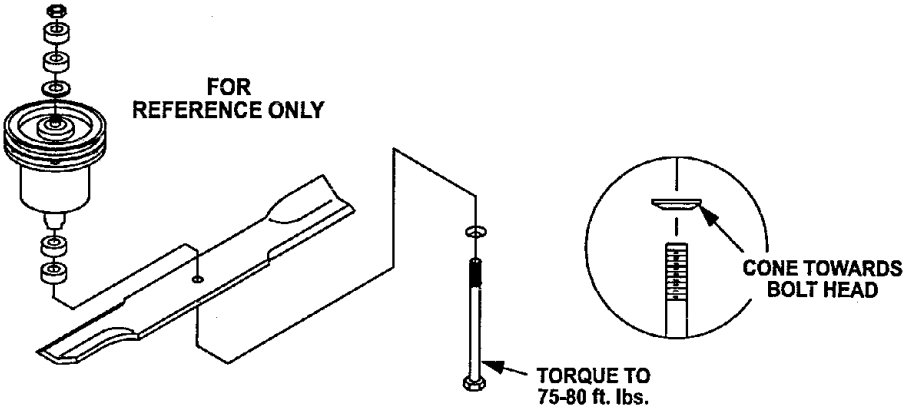


**FIG. 7**
**BLADE BOLT INSTALLATION**

5.1.4 Check safety interlock system.

Service Interval: **Daily**

a) For your safety, your Exmark mower is equipped with Operator Presence Controls (OPC). When either the mower blades are engaged, or the speed control lever is not in neutral and both hands are removed from the handles, the mower engine ***MUST stop.***

b) Check OPC circuits. Clear the area. Run engine at one-third throttle, then with drive levers and neutral lock latches in ***neutral lock position***, move the speed control lever out of neutral and release OPC levers - ***engine MUST stop.***

Again, run engine at one-third throttle, move the speed control lever to ***neutral***, engage blade clutch and release OPC levers - ***engine MUST stop.***

c) If machine does not pass any of these tests, ***DO NOT*** operate. Contact your authorized **EXMARK SERVICE DEALER.**

- **It is essential that all Operator Safety Mechanisms be connected and in proper operating condition prior to the use of the mower.**

- **When checking starting problems, be sure to keep body, hands and clothes away from areas where moving parts can suddenly engage.**

5.1.5 Check for loose hardware.

Service Interval: **Daily**

a) Stop engine and remove spark plug wire(s).

b) Visually inspect machine for any loose hardware or any other possible problem. Tighten hardware or correct the problem before operating.

5.1.6 Service pre-cleaner element and air cleaner.

Service Interval: **See Engine Owner's Manual**

5.1.7 Change engine oil.

Service Interval: **See Engine Owner's Manual**

**NOTE: Change oil after first five (5) hours of operation. Follow engine manufacturers recommendations for future oil changes.**

a) Disengage blade clutch.

b) Stop engine and remove spark plug wire(s).

c) Drain oil while engine is warm from operation.

d) Remove the oil drain plug from the right hand side of the engine. Allow oil to drain, then replace drain plug.

e) Replace the oil filter as per Engine Owner's Manual. Clean around oil filter and unscrew filter to remove. Before reinstalling new filter, apply a thin coating of oil on the surface of the rubber seal. Turn filter clockwise until rubber seal contacts the filter adapter then tighten filter an additional 2/3 to 3/4 turn.

f) Clean around oil fill cap and remove cap. Fill to the specified capacity and replace cap. Use oil as specified in Engine Owners Manual. ***Do not overfill.***

g) Start the engine and check for leaks. Stop engine and recheck oil levels.

5.1.8 Check hydraulic oil level.

Service Interval: **40 hr.**

a) Stop engine.

b) Clean area around hydraulic reservoir cap and remove cap. Oil level should be to the top of the baffle inside the tank. If not, add oil.

**Use Mobil 1 15W-50 synthetic motor oil.**

**⚠ CAUTION**

- **Safely relieve all pressure in the hydraulic system before disconnecting lines or before performing any work on the hydraulic system.**

**⚠ CAUTION**

- **Make sure all hydraulic fluid connections are tight and all hydraulic hoses and lines are in good condition before applying pressure to the system.**

**⚠ CAUTION**

- **Keep body and hands away from pin holes or nozzles that eject hydraulic fluid under high pressure. Use paper or cardboard, *NOT HANDS* to search for leaks.**
- **Hydraulic fluid escaping under pressure may have sufficient force to penetrate skin and cause serious injury. If foreign fluid is injected into the skin, it must be surgically removed within a few hours by a doctor familiar with this type of injury or gangrene may result.**

5.1.9 Change hydraulic system filter.

Service Interval: **After First 250 hrs, then yearly thereafter.**

Note: Use Exmark Part No. 513211 for Summer use above 32° F (0° C)and use Part No. 523541 for Winter use below 32° F (0° C). (Refer to 2.6.2 for Filter Specifications.)

a) Place unit on a level surface, stop engine and remove spark plug wire(s).

b) Carefully clean area around filter. It is important that no dirt or contamination enters the hydraulic system.

c) Unscrew filter to remove and allow oil to drain from reservoir. **IMPORTANT:** Before re-installing new filter, fill it completely with Mobil 1 15W-50 and apply a thin coat of oil on the surface of the rubber seal. Turn filter clockwise until rubber seal contacts the filter adapter. Do not tighten yet.

d) Fill reservoir as stated in Section 5.1.8.

e) Loosen filter 1/2 turn and allow a small amount of oil to leak from the oil filter (this allows air to be purged from the oil filter and supply hose from the hydraulic reservoir). Turn filter clockwise until rubber seal contacts the filter adapter. Then tighten the filter an additional 2/3 to 3/4 turn.

f) Raise the rear of the machine up onto jack stands high enough to raise the drive wheels off of the ground. Run machine to allow any other air to be purged from the hydraulic system and recheck the oil level.

g) If either drive wheel does not rotate, one or both of the charge pumps (located on the top of the main pump as shown in Figure 8) may have lost their " prime" . Refer to Section 5.1.10.

h) ***DO NOT*** change hydraulic system oil (*except what can be drained when changing filter*) unless it is felt that oil has been contaminated. **Changing oil unnecessarily could damage the hydraulic system by introducing contaminates into the system.**

5.1.10 Hydraulic system air purge procedure.

Air must be purged from the hydraulic system when any hydraulic components, including oil filter, are removed or any of the hydraulic lines are disconnected.

The critical area for purging air from the hydraulic system is between the oil reservoir and each charge pump located on the top of each variable displacement pump. (See Figure 8).

Air in other parts of the hydraulic system will be purged through normal operation once the charge pump is " primed" .

a) Stop engine. Raise the rear of the machine up onto jack stands high enough to raise the drive wheels off the ground.

b) Check oil level as stated in Section 5.1.8.

c) Start engine an move throttle control ahead to full throttle position. Move the speed control lever to the middle speed position and place the drive levers into the " drive" position.

If either drive wheel does not rotate, it is possible to assist the purging of the charge pump by carefully rotating the tire in the forward direction.

**NOTE: It is necessary to lightly touch the charge pump cap with your hand to check the pump temperature. If the cap is too hot to touch, turn off engine. The pumps may be damaged if the pump becomes too hot.**

If either drive wheel still does not rotate continue with step (d).

d) Thoroughly clean the area around each of the charge pump housings.

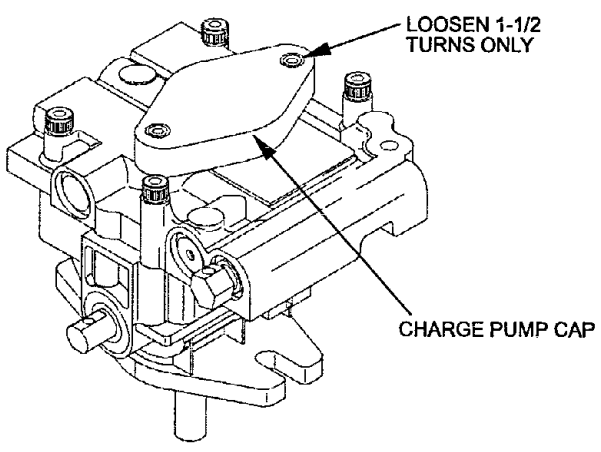


**FIG. 8**
**CHARGE PUMP LOCATION**

e) To " prime" charge pump, loosen two hex socket head capscrews (shown in Figure 8) **1-1/2 turns only.** ***Make sure engine is not running.*** Lift charge pump housing upward and wait for a steady flow of oil to flow out from under housing. ***Retighten capscrews.*** Do this for both pumps. Note: Hydraulic reservoir can be pressurized to up to 5 psi to speed this process.

f) If either drive wheel still does not rotate, stop and repeat steps (d) through (e) above for the respective pump. If wheels rotate slowly, the system may prime after additional running. Check oil level as stated in Section 5.1.8.

g) Allow unit to run several minutes after the charge pumps are " primed" with drive system in the full speed position. Check oil level as stated in Section 5.1.8.

h) Check hydro drive linkage adjustment as stated in Section 5.2.10.

5.1.11 Check tire pressures.

Service Interval: **40 hrs.**

a) Stop engine and remove spark plug wire(s). Check air pressure in tires; recommended tire pressure is: rear, 12 to 16 psi; pneumatic casters, 22 psi.

b) Inflate tires to pressures stated above. Measure circumference of each drive tire. Adjust tire pressures within above range to try to make the circumferences match as closely as possible.

**NOTE: Front caster tires have permanent tire sealant installed.**

5.1.12 Inspect Belt wear.

Service Interval: **40 hrs.**

a) Stop engine and remove spark plug wire(s).

b) Remove cutter deck belt shield to check mower primary and secondary (48" decks) belt condition.

c) Look under engine deck to check the pump drive belt condition.

d) Check all idler arms to be sure they pivot freely. Disassemble, clean and grease pivot bushings if necessary.

5.1.13 Lubrication

Service Interval: **Refer to Chart.**

a) Stop engine and remove spark plug wire(s).

b) Lubricate fittings with one to two pumps of SAE No. 2 multi-purpose gun grease.
Refer to the following chart for fitting locations and lubrication schedule.

**GREASE LUBRICATION CHART**

| FITTING LOCATIONS | INITIAL PUMPS | QUANTITY 36" | QUANTITY 48" | SERVICE INTERVAL |
|---|---|---|---|---|
| 1. Caster Wheel Bearings | 12 | 2 | 2 | Daily |
| 2. Caster Pivots | 2 | 2 | 2 | Daily |
| 3. Blade Engagement Lower Bellcrank | 1 | 1 | 1 | Monthly |
| 4. Idler Pivot (Pump Drive) | 2 | 1 | 1 | Weekly |
| 5. Pump Control Bearings | 2 | 2 | 2 | Weekly |
| 6. Cutter Deck Idler Pivots | 2 | 1 | 2 | Weekly |

No. 4 Idler Pivot (Pump Drive)
Located Under Engine Deck

No. 4 & 6 (Idler Pivots)
Disassemble and grease once a month under a " No Load" condition.

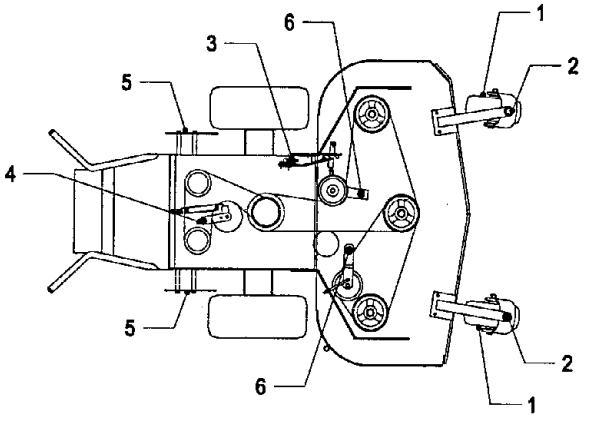


c) Lubricate pivot points with a spray penetrating lubricant as directed below.

**SPRAY LUBRICANT CHART**

| PIVOT POINT | NO. OF PLACES 36" | 48" | SERVICE INTERVAL |
|---|---|---|---|
| **1. Blade Engagement Upper Bellcrank** | **2** | **2** | **Weekly** |

5.1.14 Check spark plugs.

Service Interval: **160 hrs.**

a) Remove spark plugs, check condition and adjust plug gap or replace with new plugs. See Engine Owner's Manual.

5.1.15 Remove engine shrouds and clean cooling fins.

Service Interval: **See Engine Owner's Manual**

a) Stop engine and remove spark plug wire(s).

b) Remove cooling shrouds from engine and clean cooling fins. Also clean dust, dirt and oil from external surfaces of engine which can cause improper cooling.

c) Make sure cooling shrouds are properly reinstalled. Operating the engine without cooling shrouds will cause engine damage due to overheating.

5.1.16 Change fuel filter.

Service Interval: **As Required**

a) A fuel filter is installed in the fuel line between the fuel tank and the engine. Replace when necessary.

5.1.17 Refer to Engine Operators Manual for detailed maintenance regarding the engine.

5.1.18 Wheel hub - slotted nut torque specification.

When tightening the slotted nut on the wheel motor tapered shaft:

a) Torque the slotted nut to 100 ft. lbs.

b) Further tighten the nut until the next set of slots line up with the cross hole in the shaft.

c) Replace cotter pin.

d) To aid in wheel hub removal, it is recommended that an ***antisieze compound*** is used on the tapered shaft of the wheel motor.

5.1.19 Thread locking adhesives such as " Loctite 242" or " Fel-Pro, Pro-Lock Nut-Type" are used on the following fasteners:

a) All belt drive pulley setscrews.

b) Square head setscrews on Hydro pump control arm.

c) OPC lever setscrews.

d) Shoulder bolts in ends of speed control crank.

e) Shoulder bolts connecting Hydro control linkages to hydro pump control arms.

Adhesives such as " Loctite RC/609 or RC/680" or " Fel-Pro Pro-Lock Retaining I or Retaining II" are used on the following:

a) OPC lever hubs and cross-shaft

**NOTE: Care must be used *not* to bond the bearing, next to each OPC hub, to the cross shaft which could cause binding of the OPC levers and erratic operation.**

b) Transmission drive pulley on the engine PTO shaft.

5.1.20 An anti-seize compound is used on the blade drive pulley hub, located on the engine PTO shaft (this allows for ease of removal of the pulley). It also used on tapered shaft of wheel hub mounts.

5.1.21 Dielectric grease is used on all blade type electrical connections to prevent corrosion and loss of contact.

## 5.2 ADJUSTMENTS

**⚠ CAUTION**

- **Disengage blade clutch, shut off engine and remove spark plug wire(s) before servicing, cleaning or making adjustments.**

5.2.1 Blade Spacers:

Blades may be adjusted for cutting height by using the four 1/4" spacers found on the blade spindle bolts (factory setting is two above and two below). This allows a 1" range in 1/4" increments of cutting height in any axle position. The same number of blade spacers must be used on all blades to achieve a level cut (two above and two below, one above and three below, etc.).

For the best cut and discharge a minimum of two spacers should be placed between the blade and spindle shaft.

The highest quality cut can be achieved with all four spacers between the blade and the spindle shaft.

If the mulching kit is installed, the highest quality cut can be obtained with 3 spacers between the blade and spindle (minimum is 1 for a good cut).

If you need to cut higher or lower than what the spacers will allow, it will be necessary to adjust the rear axle height and caster position. See Section 5.2.2 below.

5.2.2 Axle height and caster spacer position:

Desired cutting height range can be obtained by adjusting the rear axle and placing caster spacers above or below the caster arm (See Figure 9).

To adjust rear axle:

a) Stop engine and remove spark plug wire(s).

b) Raise the rear of the machine up onto jack stands and remove the drive wheels.

**⚠ CAUTION**

- **When it is necessary to raise the deck or mower for service or maintenance, *DO NOT* rely solely on mechanical or hydraulic jacks for support. Use adequate jack stands or equivalent support.**

c) Loosen but do not remove the ***top*** two bolts on each hydraulic motor mounting bracket, ***DO NOT*** remove (See Figure 9).

d) Remove the bottom sets of hardware for each bracket.

e) Reposition the mounting bracket to the desired height and reinstall the bottom hardware.

f) Tighten all hardware and remount drive wheels.

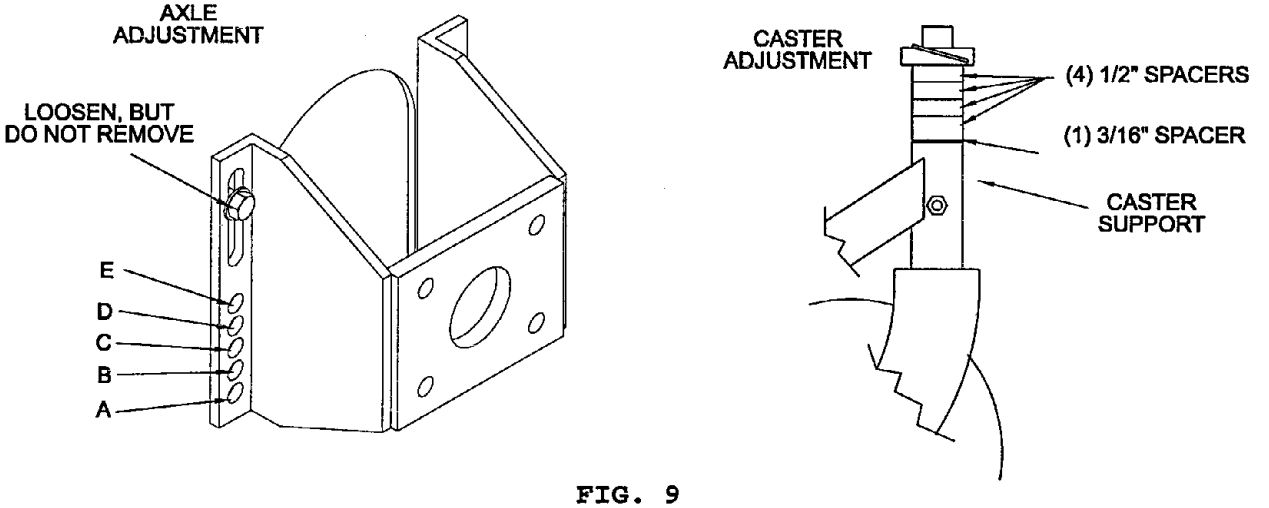


**FIG. 9**
**AXLE and CASTER HEIGHT ADJUSTMENT**

Refer to the following chart to properly adjust desired cutting height.

**CUTTING HEIGHT ADJUSTMENT (1" to 4 1/4")**

| AXLE POSITION (FIG. 9) | NO. OF SPACERS *BELOW* CASTER | | NUMBER OF 1/4" BLADE SPACERS *BELOW* SPINDLE | | | | |
|---|---|---|---|---|---|---|---|
| | 1/2" | 3/16" | 4 | 3 | 2 | 1 | 0 |
| A | 0 | 0 | 1" | 1 1/4" | 1 1/2" | 1 3/4" | 2" |
| A | 0 | 1 | 1 1/8" | 1 3/8" | 1 5/8" | 1 7/8" | 2 1/8" |
| A | 1 | 0 | 1 3/8" | 1 5/8" | 1 7/8" | 2 1/8" | 2 3/8" |
| B | 0 | 1 | 1 3/8" | 1 5/8" | 1 7/8" | 2 1/8" | 2 3/8" |
| B | 1 | 0 | 1 5/8" | 1 7/8" | 2 1/8" | 2 3/8" | 2 5/8" |
| B | 1 | 1 | 1 3/4" | 2" | 2 1/4" | 2 1/2" | 2 3/4" |
| B | 2 | 0 | 2" | 2 1/4" | 2 1/2" | 2 3/4" | 3" |
| C | 1 | 1 | 1 7/8" | 2 1/8" | 2 3/8" | 2 5/8" | 2 7/8" |
| C | 2 | 0 | 2 1/8" | 2 3/8" | 2 5/8" | 2 7/8" | 3 1/8" |
| C | 2 | 1 | 2 1/4" | 2 1/2" | 2 3/4" | 3" | 3 1/4" |
| C | 3 | 0 | 2 1/2" | 2 3/4" | 3" | 3 1/4" | 3 1/2" |
| D | 2 | 1 | 2 3/8" | 2 5/8" | 2 7/8" | 3 1/8" | 3 3/8" |
| D | 3 | 0 | 2 1/2" | 2 3/4" | 3" | 3 1/4" | 3 1/2" |
| D | 3 | 1 | 2 3/4" | 3" | 3 1/4" | 3 1/2" | 3 3/4" |
| D | 4 | 0 | 3" | 3 1/4" | 3 1/2" | 3 3/4" | 4" |
| E | 3 | 1 | 2 7/8" | 3 1/8" | 3 3/8" | 3 5/8" | 3 7/8" |
| E | 4 | 0 | 3 1/8" | 3 3/8" | 3 5/8" | 3 7/8" | 4 1/8" |
| E | 4 | 1 | 3 1/4" | 3 1/2" | 3 3/4" | 4" | 4 1/4" |

**IMPORTANT: To achieve the highest quality of cut, blades should be level with the ground, or tipped slightly down at the front.**

5.2.3 Blade engagement Linkage: Located between the blade engagement bellcrank and blade engagement assist arm beneath the front, left hand corner of the engine deck.

a) Stop engine and remove spark plug wire(s).

b) With blade drive engaged, adjust the linkage length to obtain 1/8" to 3/16" clearance between the lower end of the bellcrank and the axle support gusset (See Figure 10).

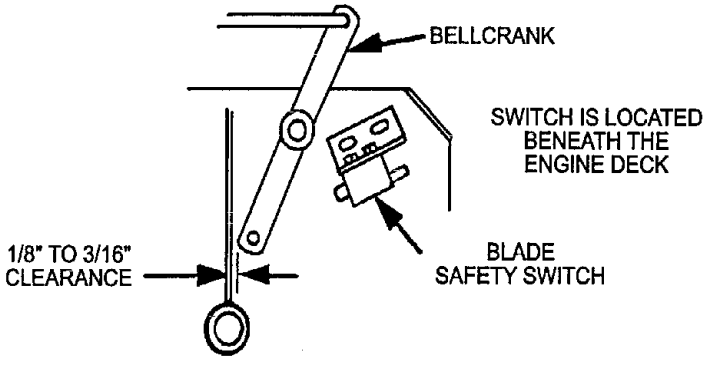


**FIG. 10**
**BLADE ENGAGEMENT LINKAGE**

5.2.4 Blade Safety Switch:

a) Stop engine and remove spark plug wire(s).
b) With blades disengaged and the bellcrank touching the rear of the slot in the engine deck, adjust the blade safety switch mounting bracket (if needed) until the bellcrank depresses the plunger by 1/4" .

c) Be sure the bellcrank ***DOES NOT*** touch the switch body or damage to the switch could occur.

d) Retighten switch blade mounting bracket.

5.2.5 Engine to Cutter Deck Belt:

a) Stop engine and remove spark plug wire(s).

b) Check belt guides under rear engine and front mower deck to see that they are properly set (See Section 5.2.7.
c) Belt must be tight enough so it does not slip during heavy loads while cutting grass. Over-tensioning will reduce belt and spindle bearing life. To adjust belt tension, loosen the 5/16" whizlock nut on turnbuckle and rotate the turn buckle; rotate turnbuckle toward rear of mower to tighten, and toward front of mower to loosen belt tension (See Figure 11).

Check belt tension after the first hour of operation and at least twice during the first 24 hours of operation. Adjust as necessary.

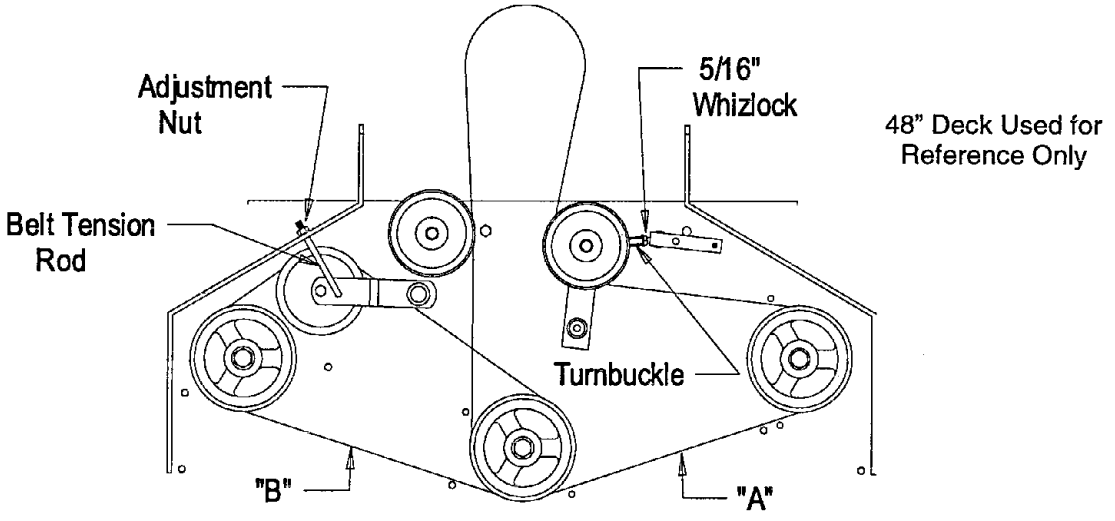


**FIG. 11**
**CUTTER DECK BELT ADJUSTMENT**

e) For the 14 and 15 hp engines, proper belt tension will require about 10 lbs. side pull on belt, halfway between pulleys, to deflect belt 1/2" . (See Figure 11, Point A).

5.2.6 Secondary Belt: **(48" units only)**

a) Stop engine and remove spark plug wire(s).

b) The secondary drive belt is adjusted via the belt tension rod (See Figure 11). The 5/16" nylock adjustment nut is located at the rear, right corner of engine deck.

c) Proper belt tension (for the secondary belt) will require about 10 lbs. side pull on belt, halfway between pulleys, to deflect belt 1/2" . (See Point B, Figure 11).

5.2.7 Belt Guide Adjustment:

a) Stop engine and remove spark plug wire(s).

b) Engage the blade drive belt.

c) Check belt guide clearance on the mower deck. The four welded belt guides on the mower deck should be located 1/8" from belt. Adjust if necessary.

d) Check belt guides under the engine deck for proper adjustment (See Figures 12 and 13). Adjust as necessary. The ***disengaged belt should not drag or fall off*** pulley when guides are properly adjusted.

**NOTE: Belt guides are not installed on the same bolts on the 36" model as on the 48" models**

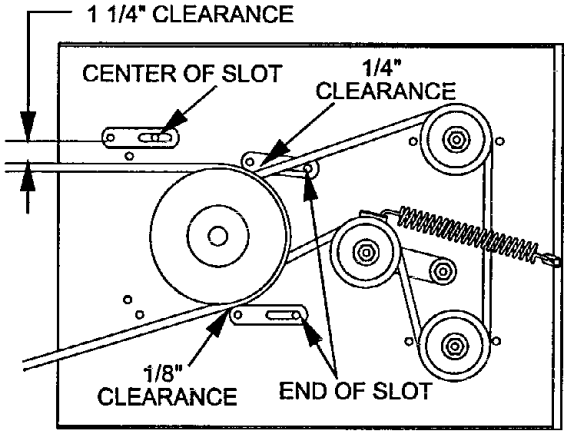


**FIG. 12**
**BELT GUIDE LOCATION**
**36" MOWER DECK**
**(Under Rear Deck)**

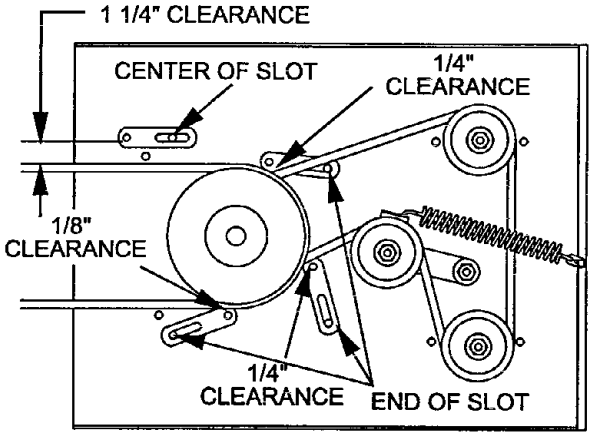


**FIG. 13**
**BELT GUIDE LOCATION**
**48" MOWER DECK**
**(Under Rear Deck)**

5.2.8 Pump Drive Belt Tension Adjustment:
***No adjustment necessary.***

5.2.9 Hydro Drive Linkage Adjustment:

a) Adjust Speed Control Linkage and neutral safety switch

1. Move the speed control lever (located on the console) to the full forward position and check the orientation of the tabs on the ends of the speed control crank fig. 15). These tabs should be pointing straight down at the 6 o'clock position or slightly forward. Adjust the threaded yoke at the bottom of the speed control link until the tabs are positioned correctly.

2. Pull the speed control lever back to neutral. Check that the neutral safety switch actuating tab has depressed the plunger of the switch so that there is about 5/16" between the tab and the switch. See fig. 14. If necessary, move the switch fore and aft.

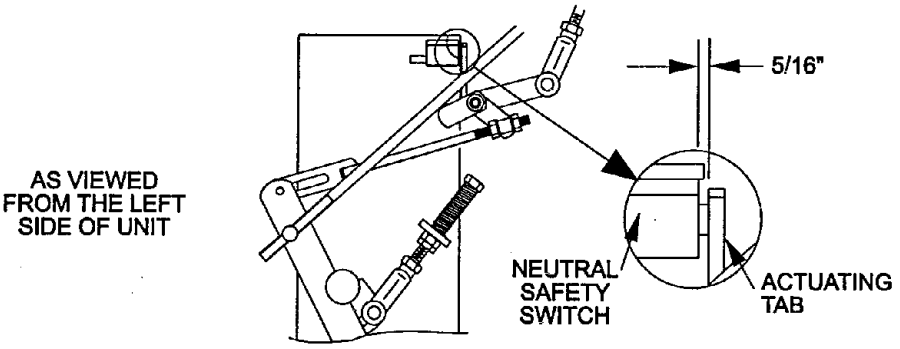


**FIG. 14**
**NEUTRAL SAFETY SWITCH ADJUSTMENT**

b) Adjust Neutral Control Linkages

1. Raise the rear of the machine up onto jack stands high enough to raise the drive wheels off of the ground.

2. Start the engine and move the throttle ahead to the full throttle position. Place the neutral lock latches in the drive position as shown in Figure 6 and move the speed control lever to the " mid-speed" position.

   Note: The OPC levers must be held down whenever the speed control lever is out of the neutral position or the engine will kill.

3. Squeeze the respective drive lever until an increased resistance is felt, this is where neutral should be. Make sure you have not reached the end of the neutral lock latch slot. If you have, shorten the drive lever linkage. If the wheel turns while holding the drive lever in neutral, the neutral control linkages need to be adjusted. If wheel stop then go to step 7.

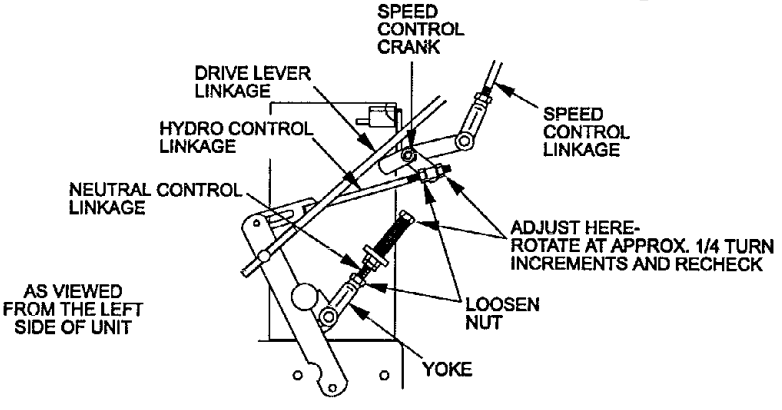


**FIG. 15**
**HYDRO DRIVE LINKAGE ADJUSTMENT**

4. Loosen the nut against the neutral control linkage yoke as shown in Figure 15.

5. Adjust the neutral control linkage until the respective drive wheel stops when the lever is pulled against the neutral spring (neutral position). Turn the adjusting bolt approximately 1/4 turn clockwise if the wheel is turning in reverse or turn the bolt approximately 1/4 turn counter-clockwise if the wheel is turning forward. Release the drive lever to the forward drive position and squeeze back into the neutral position. Check to see if the wheel stops. If not, repeat the above adjustment procedure.

6. Make this adjustment on both sides.

7. After adjustments are made and the wheels stop when the drive levers are in the neutral position, tighten the nuts against the yokes.

c) Adjust Hydro Control Linkages:

1. Place the speed control lever in the " neutral" position. This adjustment is again made with rear of machine on jack stands and engine running at full throttle. OPC levers will have to be held down whenever speed control levers are moved out of the neutral position.

2. Loosen the front nut on **left** hydro control linkage as shown in Figure 15. Turn the rear control linkage adjusting nut counter-clockwise until wheel rotates forward. Turn the rear nut of left control linkage clockwise 1/4 of a turn at a time, stopping to move the speed control forward and back to neutral, until left wheel stops rotating forward.

   Turn the rear nut an additional 1/2 turn and tighten the front nut making sure not to put a bind on the linkage. Make sure flat part of linkage is perpendicular to pin part of swivel. See Fig. 16.

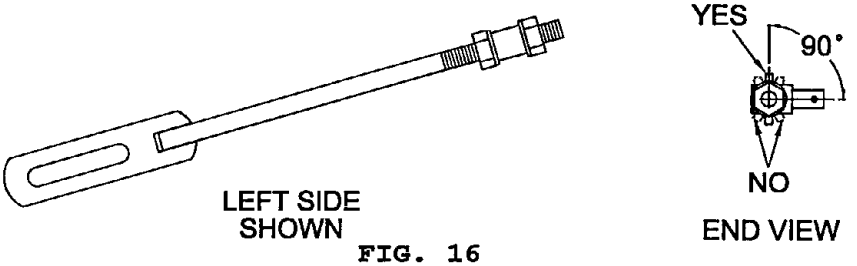


**FIG. 16**
**HYDRO CONTROL LINK/SWIVEL ADJUSTMENT**

After adjusting the left hydro control linkage, move the speed control lever to the mid-speed position and then back to the neutral position. Recheck the left drive wheel rotation to see if further adjustment is necessary - be sure the speed control lever is in the neutral position.

***If inconsistent neutral occurs, check to be sure both springs are properly tightened on the speed control lever under the console - especially the rear pivot spring.***

Repeat above adjustments if necessary.

3. Place the speed control lever in neutral. Adjust the right side linkage by turning the quick track knob counter-clockwise until the tire begins to rotate forward. Begin to retighten the knob clockwise about 1/4 turn at a time, stopping to move the speed control forward and back to neutral. Recheck the drive wheel rotation to see if further adjustment is necessary.

4. The spring that keeps tension on the knob should normally not need adjustment. However, if adjustment is needed, adjust to where length of spring is about 1" between the washers. Adjust spring length by turning nut at front of spring.

d) Drive Lever Linkage Adjustment

1. With rear of machine still on jack stands and engine running at full throttle, move the speed control lever to the midway position. Move the respective drive lever upward until it reaches the ***neutral*** position and engage neutral lock latches. See fig. 17. If the tire rotates in either direction, the length of the drive lever link will need to be adjusted.

2. Adjust the linkage length by releasing the drive lever and removing clevis pin and rotating the linkage in the lower swivel. Lengthen the linkage if the tire is turning in reverse and shorten the linkage if the tire is creeping forward. Rotate the linkage several turns if the tire is rotating fairly fast. But as the adjustment gets closer, adjust the linkage in 1/2 turn increments. Release and re-engage neutral lock latch checking that the tire stops. Continue these process until the tire is at a dead stop.

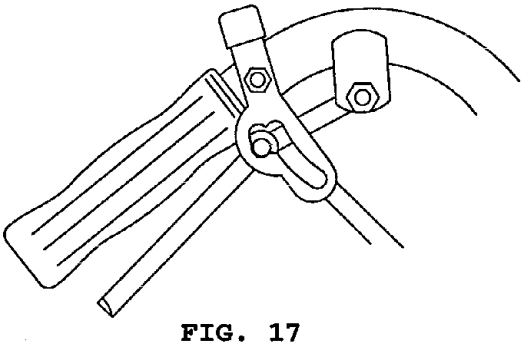

**FIG. 17**
**DRIVE LEVER AND LATCH IN NEUTRAL POSITION**

3. Replace the hairpin back into each clevis pin.

4. Make this adjustment for both sides.

e) Tracking Adjustment

1. Stop engine, Raise the rear of the machine, remove jack stands and carefully lower the machine to the ground.

2. Check the drive tire pressures and tire circumferences. See 5.1.11.

3. Run the unit and observe the tracking on a level, smooth, hard surface such as concrete or asphalt.

4. If the unit tracks to one side or the other, turn the quick track knob . Turn the knob right to " steer" right, turn the knob left to " steer" left.

5.2.10 <u>Hydro Pump Spring Tension Setting</u>:

a) For medium or heavy duty drive conditions such as operation with a sulky on steep slopes, a higher spring force may be required on the hydro pump control arms to prevent the drive system from stalling.

b) For a heavier drive setting, relocate the spring anchor links to either the " medium" or " heavy duty" positions as shown in Figure 18. The spring anchor links are attached to the upper rear corner of the hydro drive shields on the left and right hand sides of the machine.

**Note: In the " medium" or " heavy duty" positions, the drive lever forces at the upper handle will also be increased.**

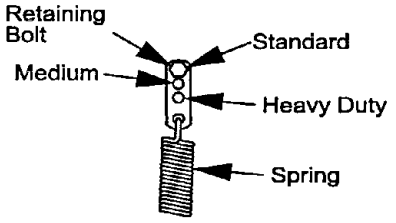


**FIG. 18**
**HYDRO PUMP SPRING TENSION SETTING**

# 6. TROUBLE SHOOTING

## 6.1 MOWER TRACKS TO LEFT OR RIGHT.

a) Check the drive tire pressures and circumferences. See 5.1.11.

b) Turn knob on the right hydro control linkage in the direction that the mower needs to be adjusted to. Turn the knob in 1/4 turn increments until the mower tracks correctly.

## 6.2 MOWER CUTS UNEVENLY.

a) Check the drive tire pressures and circumferences. See 5.1.11.

A more uniform cutting height may be obtained with higher tire pressure on rough terrain. A lower tire pressure provides more flotation.

b) Check blade spacers, they must be equal on each blade.

c) Check caster mounting brackets to be sure all bolts are tight.

d) Check blades tip to tip for straightness. (They should be within 3/16" , or one blade width from being in line.)

## 6.3 BLADES DO NOT STOP WHEN DISENGAGED.

a) Check belt guides under rear deck to make sure they are properly set (See Section 5.2.7) and check the blade engagement adjustment (See Section 5.2.3.).

## 6.4 ENGINE WILL NOT START.

a) Check that the choke is in the " ON" position for a cold engine or in the " OFF" position for a warm engine. See 4.3.2.

**NOTE: Kawasaki engines may need to be choked even when warm.**

b) Make sure speed control lever is in the " true neutral" position.(See 5.2.9).

c) Check that the blades are disengaged and the blade switch is depressed.

d) Check that there is fuel in the tank and that the fuel valve is open.

e) Check that the spark plug wire(s) are properly connected.

f) Check for loose or faulty wiring connections. If it is necessary to disconnect wire connectors, ***Do Not*** pull on the wires while disconnecting.

g) Check for corrosion at all wiring connections. Even minor corrosion may cause a faulty connection. Clean connector terminals thoroughly with electrical contact cleaner, apply dielectric grease and reconnect.

**⚠ CAUTION**

- **It is essential that all operator safety mechanisms be connected and in proper operating condition prior to mower use.**

**NOTE: After carefully checking the above steps, attempt to start the engine. If it does not start, contact your authorized Exmark service dealer.**

## ENGINE TROUBLESHOOTING

**⚠ CAUTION**

- **When checking starting problems, be sure to keep body, hands and clothes away from areas where moving parts can suddenly engage.**

**⚠ CAUTION**

- **When performing maintenance, servicing or repairing the unit, allow the engine ample time to cool down. Serious burns can result from hot metal.**

When a problem occurs, do not overlook the simple causes. For example, starting problems could be caused by an empty fuel tank.

The following table lists some of the common causes of trouble.

Do not attempt to service or replace major items or any items that call for special timing or adjustment procedures (such as valves, governor, etc.). Have this work done by your **Engine Service Dealer.**

### ENGINE TROUBLESHOOTING TABLE

| PROBLEM | NO FUEL | IMPROPER FUEL | DIRT IN FUEL LINE | DIRTY AIR FILTER | FAULTY SPARK PLUG | ENGINE OVERLOADED | BLOCKED FUEL FILTER | INCORRECT OIL LEVEL | DIRTY AIR SCREEN |
|---|---|---|---|---|---|---|---|---|---|
| Will not start | X | | X | X | X | X | X | | |
| Hard starting | X | X | X | X | X | X | X | | |
| Stops suddenly | X | | X | X | | X | X | X | X |
| Lacks power | | X | X | X | X | X | X | X | X |
| Operates erratically | | X | X | X | X | X | X | | X |
| Knocks or pings | | X | | | | X | | | X |
| Skips or misfires | | X | X | X | X | | | | X |
| Backfires | | | X | X | X | X | | | X |
| Overheats | | | X | X | | X | | X | X |
| High fuel consumption | | | | X | X | X | | | X |

## 7. MOWER DECK BELT ROUTING

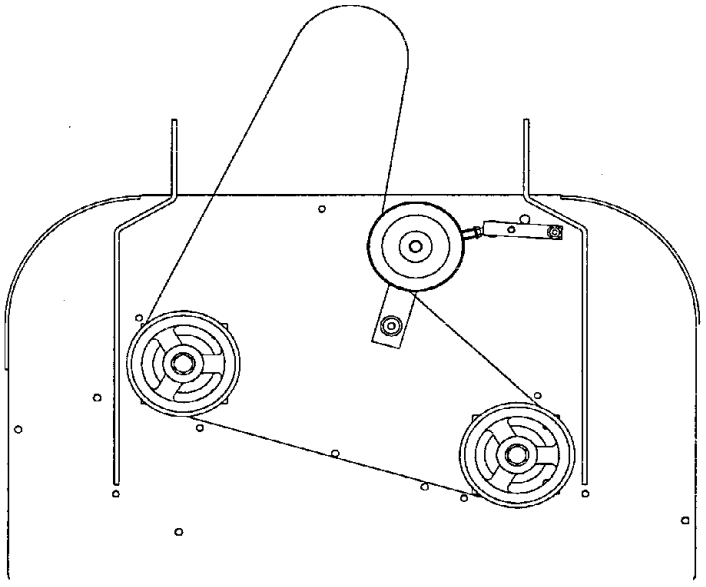

**FIG. 20**
**32" and 36" MOWER DECK**

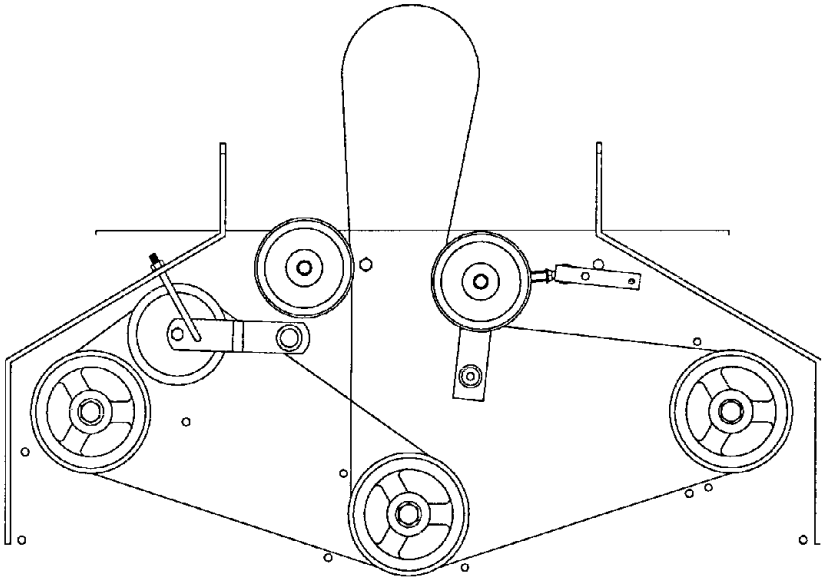

**FIG. 21**
**48" MOWER DECK**

## 8. WIRING DIAGRAM

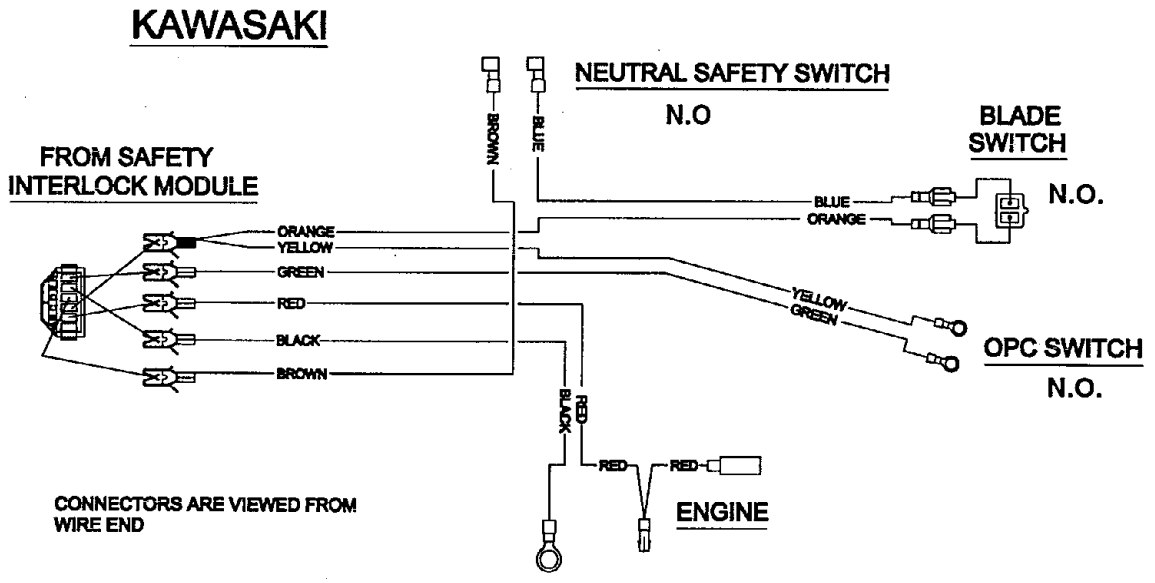


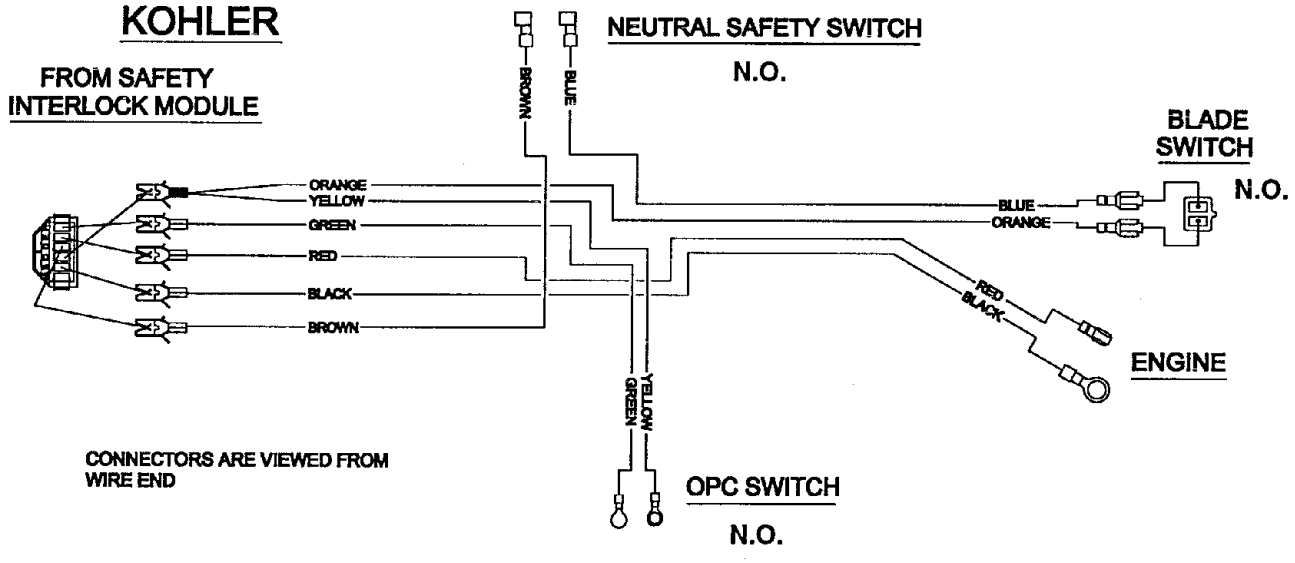

## 9. HYDRAULIC DIAGRAM

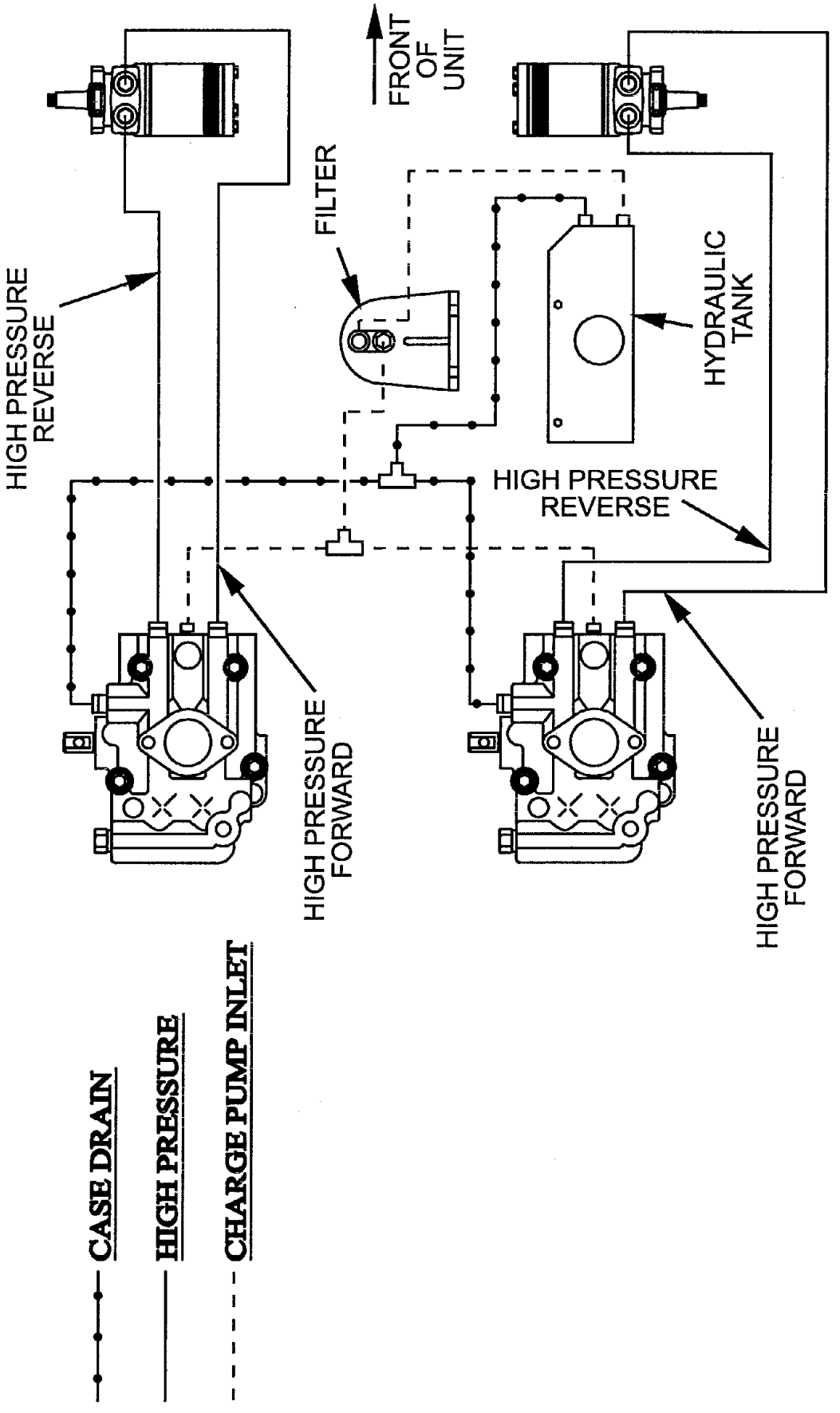

## 10. WARRANTY

Limited Warranty Exmark Commercial Turf Equipment Exmark Mfg. Co. Inc. ("Exmark") warrants on the terms and conditions herein, that it will repair, replace or adjust any part manufactured by Exmark and found by Exmark(in the exercise of its reasonable discretion)to be defective in factory material or workmanship.

This warranty is limited to one year from the date of original retail purchase (90 days for rental use) for any Exmark mower that is used for commercial or any other income producing purpose. The Blade Spindle assemblies will be warranted for three years, one year parts and labor with an additional two years parts only, from date of original retail purchase against defects in materials or workmanship. The hydrostatic traction drive system will be warranted for two full years from date of original retail purchase against defects in materials or workmanship excluding hoses. Exmark Mfg will extend the Peerless 5-speed transmission manufacturer's warranty from 90 days to one year. Belts and tires are warranted for 90 days against defects in materials or workmanship.

The engine warranty is covered by its respective engine manufacturer. Please refer to the engine manufacturers warranty statement that is included in the literature packet. Exmark is not authorized to handle warranty adjustments on engines. Engine warranties should be referred to the nearest authorized service outlet of the engine manufacturer.

This warranty extends only to the original retail purchaser of the equipment. The warranty may not be assigned or transferred without the prior express written consent of Exmark. The warranty commences upon the date of the original retail purchase.

The Exmark turf equipment, including any defective part, must be returned to an authorized Exmark service dealer within the warranty period. The warranty shall extend to cost to repair or replace(as determined by Exmark) the defective part, including labor. The expense of delivering the mower to the dealer for warranty work and the expense of returning it back to the owner after repair or replacement will be paid for by the owner. Exmark's responsibility in respect to claims is limited to making the required repairs or replacements, and no claim of breach of warranty shall be cause for cancellation or rescission of the contract of sale of any Exmark mower. Proof of purchase may be required by the dealer to substantiate any warranty claim. All warranty work must be performed by an authorized Exmark service dealer.

This warranty extends only to turf equipment operated under normal conditions and properly serviced and maintained. The warranty expressly does not cover: (i) any defects, damage or deterioration due to normal use, wear and tear, or exposure; (ii) normal maintenance services, such as oil change, cleaning, lubrication, adjustment; (iii) replacement of service items, such as oil, lubricants, spark plugs, belts, rubber hoses or other items subject to normal service replacement; (iv) damage or defects arising out of or relating to misuse, neglect, alteration, negligence or accident; (v) repair or replacement arising from operation of or use of the turf equipment which is not in accordance with operating instructions as specified in the operator's manual or other operational instructions provided by Exmark; (vi) repair or replacement arising as a result of any operation from turf equipment that has been altered or modified so as to, in the determination of Exmark, adversely affect the operation, performance or durability of the equipment or that has altered, modified or affected the turf equipment so as to change the intended use of the product; (vii) repair or replacement necessitated by use of parts, accessories or supplies, including gasoline, oil or

lubricants, incompatible with the turf equipment or other than as recommended in the operator's manual or other operational instructions provided by Exmark; (viii) repairs or replacements resulting from parts or accessories which have adversely affected the operation, performance or durability of the turf equipment; or (ix) damage or defects due to or arising out of repair of turf equipment by person or persons other than an authorized Exmark service dealer or the installation of parts other than genuine Exmark or Exmark recommended parts.

As a condition to this warranty, customer shall have read the operator's manual and shall have returned to Exmark, within the prescribed time, the enclosed warranty registration card.

The sole liability of Exmark with respect to this warranty shall be repair and replacement as set forth herein. Exmark shall have no liability for any other cost, loss or damage, including but not limited to, any incidental or consequential loss or damage. In particular, Exmark shall have no liability or responsibility for: (i) expenses relating to gasoline, oil or lubricants; (ii) loss, cost or expense relating to transportation or delivery of turf equipment from the location of owner or location where used by owner to or from any authorized Exmark service dealer; (iii) travel time, overtime, after hours time or other extraordinary repair charges or charge relating to repairs or replacements outside of normal business hours at the place of business of the authorized Exmark service dealer; (iv) rental of like or similar replacement equipment during the period of any warranty, repair or replacement work; (v) any telephone or telegram charges or travel charges; (vi) loss or damage to person or property other than that covered by the terms of this warranty; (vii) any claims for lost revenue, lost profit or additional cost as a result of a claim of breach of warranty; or (viii) attorney's fees.

There are no representations or warranties which have been authorized and provided to the buyer of the turf equipment, other than as set forth in this warranty. Any and all statements or representations made by any seller of this equipment, including those set forth in any sales literature or made orally by any sales representative, are superseded by the terms of this warranty. Any affirmation of fact or promise made by Exmark or any of its representatives to the buyer which relates to the goods that are the subject of this warranty shall not be regarded as part of the basis of the bargain and shall not be deemed to create any express warranty that such goods shall conform to the affirmation or promise.

THERE ARE NO UNDERSTANDINGS, AGREEMENTS, REPRESENTATIONS, OR WARRANTIES, EXPRESS OR IMPLIED (INCLUDING BUT NOT LIMITED TO ANY REGARDING THE MERCHANTABILITY OR FITNESS FOR A PARTICULAR PURPOSE), NOT SPECIFIED HEREIN, RESPECTING THE EQUIPMENT WHICH IS THE SUBJECT OF THIS WARRANTY.

This warranty applies to all Exmark turf equipment sold in the United States and Canada and intended to be used for commercial purposes.

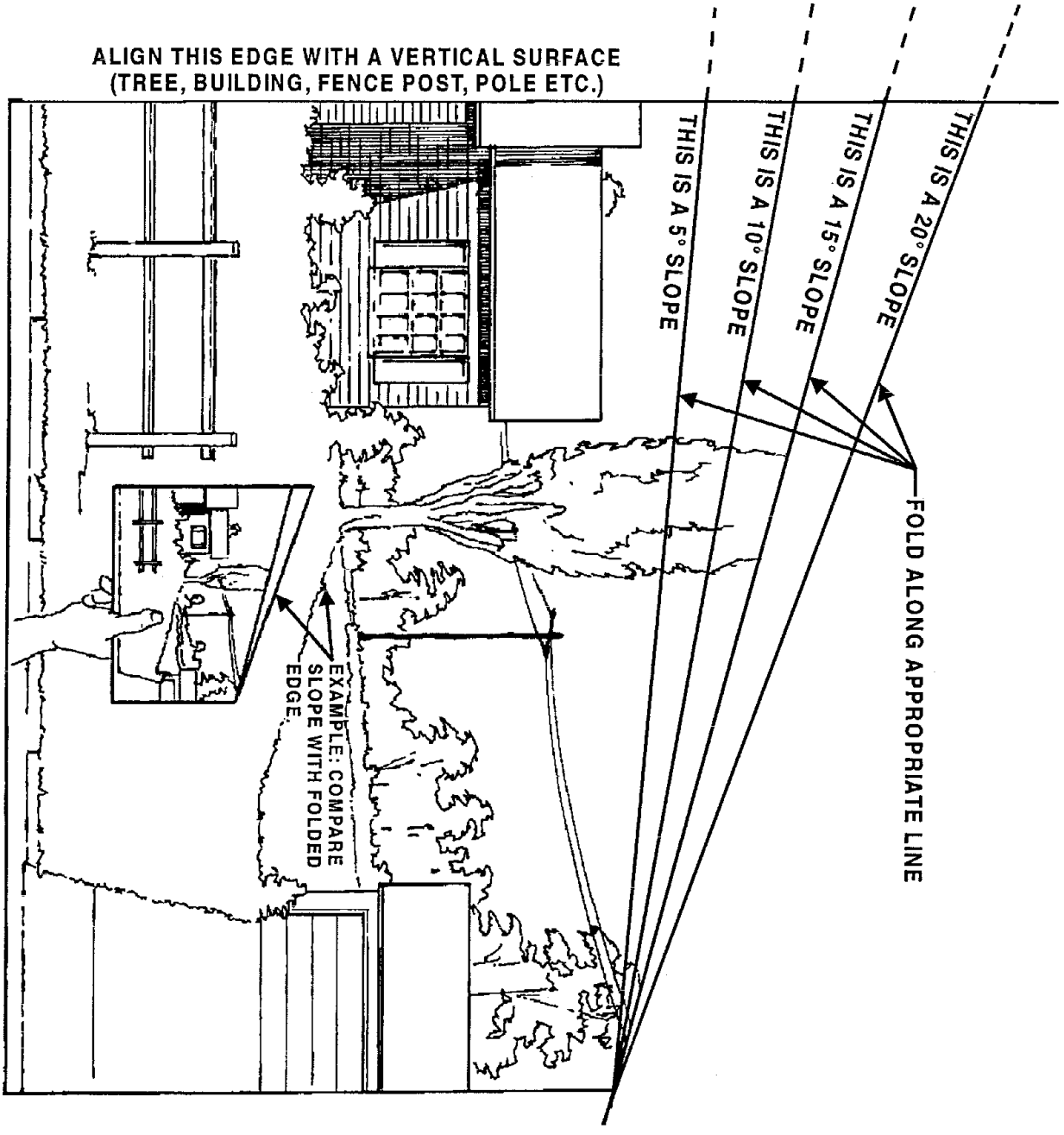
THIS IS A 20° SLOPE
THIS IS A 15° SLOPE
THIS IS A 10° SLOPE
THIS IS A 5° SLOPE
FOLD ALONG APPROPRIATE LINE
ALIGN THIS EDGE WITH A VERTICAL SURFACE
(TREE, BUILDING, FENCE POST, POLE ETC.)
EXAMPLE: COMPARE
SLOPE WITH FOLDED
EDGE

## SEE EXMARK'S COMPLETE LINE OF PRODUCTS FOR TURF CARE

LAZER Z™

LAZER Z™ HP

EXPLORER®

TURF RANGER®

TURF TRACER®

TURF TRACER® HP

VIKING HYDRO

METRO™

METRO™ HP

SELF STEERING SULKY

GRASS CATCHER

MICRO-MULCH ™ ACCESSORY

©1997,1998 EXMARK MFG. CO. INC.
INDUSTRIAL PARK BOX 808
BEATRICE, NE 68310

ALL RIGHTS RESERVED

PART NO. 850622
(402) 223-6300
FAX (402) 223-5489

PRINTED IN U.S.A.

eXmark® MFG. CO. INC.